Description

S6-600W series is specially designed for sports lighting and industrial lighting applications. It is constant current LED driver that operates from 220-480Vac with DMX programming dimming function. This Rectangle integrated structure enables it to have a better heat dissipation cooler, significantly improving reliability and extending product life, the better thermal design and high efficiency enable the driver to operate with high reliability, and extending product lifetime. Overall protection is provided against lightning surge, output over voltage, short circuit, and over temperature, to ensure low failure rate.

Product Features

- Universal input voltage range: 198~528Vac;
- Isolated constant power design;
- DMX -RDM control optional, Support RDM control mode & controller address setting;
- Support flashing function with maximum of 6 flashes per second
- Ultra low ripple: < 2%;
- PF : >0.95@100%load ,THD: <15%@100%load;
- Inrush current:<40A@480Vac;
- Surge protection: DM 6KV,CM 10KV;
- All -around protection: SCP,OVP,OTP;
- Ingress protection rating: IP66,IK08;
- Ambient temperature:-40℃~50℃;
- 7 years warranty.

Application

Stadium Lighting
Area and flood lighting
High-bay lighting.

Models

Model Number	Input Voltage Range (Vac)	Max Output Power (W)	Output Voltage Range (Vdc)	Full Power Output Current Range (A)	Default Current(A)	Eff. (Typ.)	PF(Typ.)	THD(Typ.)
S6-600R360	198~528Vac	600	172~360	1.67~3.00	2.1	94.0%	0.97	15%

NOTES:

[1]. All specifications are measured at 25℃ ambient temperature, input voltage 230Vac, and the typical value tested at full load, if no specific note.

[2]. The driver product is suitable for 265W-600W LED module.

[3]. Efficiency ≥ 85% at 50% load @25℃.

Input Specifications

Parameter	Min	Typ.	Max	Notes
Input Voltage Range	198Vac	220V/277V/347V 400V/480VAC	528Vac	
Input Frequency AC	47Hz	50/60Hz	63Hz	
Max Input Current	-	-	3.2A	220-480Vac&Full Load.
Max Input Power	-	-	660W	220Vac&Full Load.
Leakage Current	-	-	0.70mA	IEC 60598-1;240Vac/60Hz.
Inrush Current	-	-	30A	220Vac&Full Load, Cold Start.
Standby Power Consumption	-	-	0.5W	230Vac&50Hz.
Power Factor(PF)	0.96	0.98	-	220Vac, 50-60Hz, 100% Load.
Power Factor(PF)	0.90	0.95	-	480Vac, 50/60Hz, 70%-100% load.
Total Harmonic Distortion(THD)	-	5%	10%	220-400Vac, 50-60Hz, 100% Load.
Total Harmonic Distortion(THD)	-	15%	20%	220-480Vac, 50-60Hz, 70%-100% Load.
MCB(B16)	-	6	-	230Vac.

Output Specifications

Parameter	Min	Typ.	Max	Notes
Output Voltage Range	172Vdc	-	360Vdc	The full power cannot be lower than 200Vdc.
Open Circuit Voltage	-	-	420Vdc	The open circuit protection is locked, and the AC needs to be powered on again.
Output Current Range	0.30A	-	3.00A	The DMX programmer regulates the I_{set} current.
Full Power Current Range	1.67A	-	3.00A	
Current Accuracy	-5%	-	+5%	Iset>1.67A
Total Output Current Ripple (pk-pk)	-	5%	10%	＞15KHz BW, full load& LED load, the ripple would be tiny different under different LED load.
Total Output Current Ripple (pk-pk)	-	1.5%	2%	＜1KHz BW, full load& LED load, the ripple would be tiny different under different LED load.
Startup Overshoot Current	-	6%	10%	220~480Vac &100% Load, load is LED.
Line Regulation	-1%	-	+1%	25℃±10℃ ambient temperature, input Voltage changes from 220Vac to480Vac.
Load Regulation	-3%	-	+3%	25℃±10℃ ambient temperature, Input Voltage 230Vac,load changes from 60% to 100%.
Turn-on Delay Time	-	1s	2s	230Vac,100% load.

General Specifications

parameter	Min	Typ.	Max	Notes
Efficiency@220Vac Io=1.67A	92.5%	94.0%	-	Measured at full load and 25℃ ambient temperature.
Efficiency@220Vac Io=3.00A	92.5%	94.0%	-	Measured at full load and 25℃ ambient temperature.
Efficiency@400Vac Io=1.67A	93.0%	94.5%	-	Measured at full load and 25℃ ambient temperature.
Efficiency@400Vac Io=3.00A	93.0%	94.5%	-	Measured at full load and 25℃ ambient temperature.
Efficiency@480Vac Io=1.67A	93.5%	95.0%	-	Measured at full load and 25℃ ambient temperature.
Efficiency@480Vac Io=3.00A	93.0%	94.5%	-	Measured at full load and 25℃ ambient temperature.
Mean Time Between Failure	-	200Khours	-	25℃±10℃ ambient temperature, 230Vac,100% load (MIL-HDBK-217F/SR-332).
Lifetime	-	50Khours	-	Tc=75℃, 230Vac&100% load.
Operating Temperature Ta	-40℃	-	+50℃	220-480Vac&100% load.
Operating Tc for Safety Tc_s	-40℃	-	+90℃	
Operating Tc for Warranty Tc_w	-40℃	-	+75℃	7 years warranty case temperature Humidity: 10% to 80% RH No condensation.
Storage Temperature Ta	-40℃	-	+85℃	Humidity: 5% to 50% RH No condensation.
Altitude	-60m	-	4000m	
Input Under Voltage Protection	152Vac	167Vac	186Vac	
External NTC (R1)		18K ohm (Set by software)		When the R-NTC is reduced to R1, the external thermal protection is triggered and the output current gradually decreases.
External NTC (R2)		9.1K ohm (Set by software)		When the R-NTC is reduced to R2, the output current is reduced to the programmed protection current value.
External NTC (Protection Circuit)	10%I_{oset}	60%I_{oset}	100%I_{oset}	10%I_{oset}>I_{omin} (Default setting 60%).
External NTC (Protection Circuit)	I_{omin}	60%I_{oset}	100%I_{oset}	10%I_{oset}≤I_{omin} (Default setting 60%).
Over Temperature Protection Tc	-	93℃	-	230Vac&100% load.
Short Circuit Protection	-	-	-	Self-recovery after 30 seconds.
Dimensions (L*W*H)	335*143.5*58.6mm			
Net Weight	3100±50g/PCS			
Package	544*365*195mm; 4PCS/Ctn			

Dimming

Parameter	Min	Typ.	Max	Notes
DMX+ to DMX-	-6V	-	6V	
DMX+ to Chassis	22M ohm	-	-	At 42Vdc
DMX- to Chassis	22M ohm	-	-	At 42Vdc
Logic 0 Input	-	-	-0.2V	DMX+ to DMX-
Logic 1 Input	0.2V	-	-	DMX+ to DMX-
Communication Baud Rate	-	250K bps	-	
Dimming Output Range	10%I_{omax}	-	100%I_{oset}	10%I_{omax}≤I_{oset}≤100%I_{omax}

Note:

All specifications are typical at 25℃ unless stated otherwise.

Safety Specification

Dielectric Strength (Input-Output)	-	4372Vac	-	60s，Current not exceeding 5mA.
Dielectric Strength (Input-Ground)	-	1830Vac	-	60s，Current not exceeding 5mA.
Dielectric Strength (Output-Ground)	-	2100Vac	-	60s，Current not exceeding 5mA.
Dielectric Strength (Input-Dimming)	-	1600Vac	-	60s，Current not exceeding 5mA.
Grounding Resistance	-	-	0.1Ω	25℃±10℃ Ambient Temperature, pass 25A Current, 60s.
Insulation Resistance	10MΩ	-	-	Input-Output, Input-PE, Output-PE, 500Vdc/60s/25℃.

Safety Compliance

Safety Category	Standards	Approved	Notes
CCC	GB19510.1,GB19510.14	√	
CE	EN61347-1, EN61347-2-13, EN62493	√	
ENEC	EN61347-1, EN61347-2-13, EN62384	√	
CB	IEC61347-1, IEC61347-2-13	√	
BIS	IS 15885(PART 2/SEC 13)		
UL	UL 8750		
CUL	CSA C22.2 No.250.13	√	
KC	K61347-1, K61347-2-13		
PSE	J61347-1, J61347-2-13		
SAA	AS/NZS IEC 61347.2.13		
SAA	AS/NZS 61347.1		

EMC Compliance

EMC Category	Standards	Approved	Notes
CCC	GB/T 17743, GB 17625.1	√	
CE	EN 55015	√	
CE	EN 61000-3-2, EN 61000-3-3	√	
CE	EN61000-4-2,3,4,5,6,11	√	
CE	EN 61547	√	
KC	K61547		
KC	K00015		
PSE	J55015		
FCC	FCC part 15		
Surge Shock Immunity	ANSI/C82.77-5-2017		
Ringing Wave			

RoHS

Our products comply with RoHS Directive (EU) 2015/863 amending Annex II to Directive 2011/65/EU.

Inrush Current

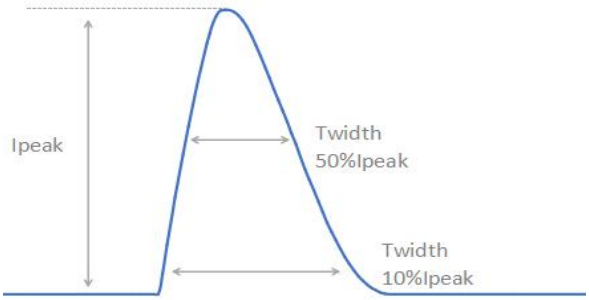

Vin	Ipeak	T(@10% of Ipeak)	T(@50% of Ipeak)
220Vac	12.7A	2.44ms	1.030ms
400Vac	24.6A	2.50ms	1.120ms
480Vac	27.6A	2.50ms	1.120ms

Output Voltage vs. Output Current

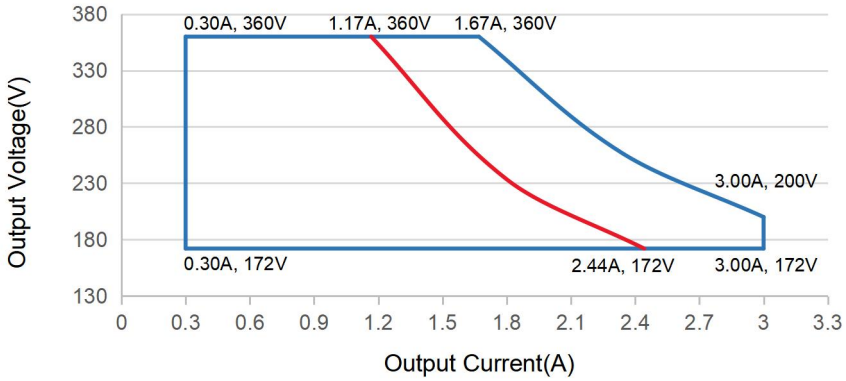

Red curve: good performance area.

Output Power vs. Input Voltage

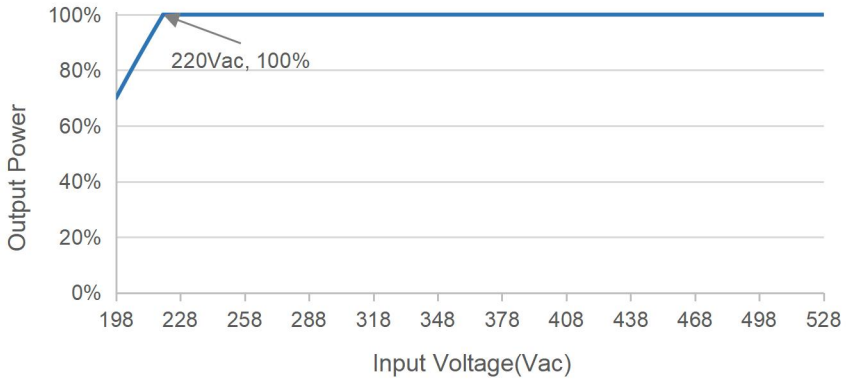

Efficiency vs. Load (Io=3.00A)

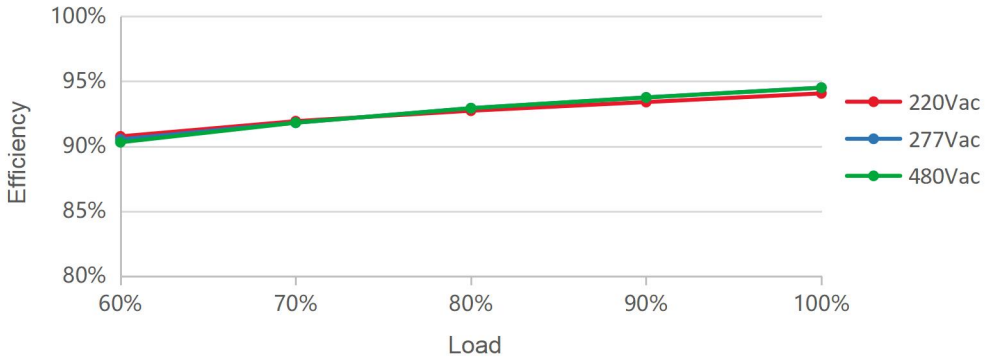

Efficiency vs. Load (Io=1.67A)

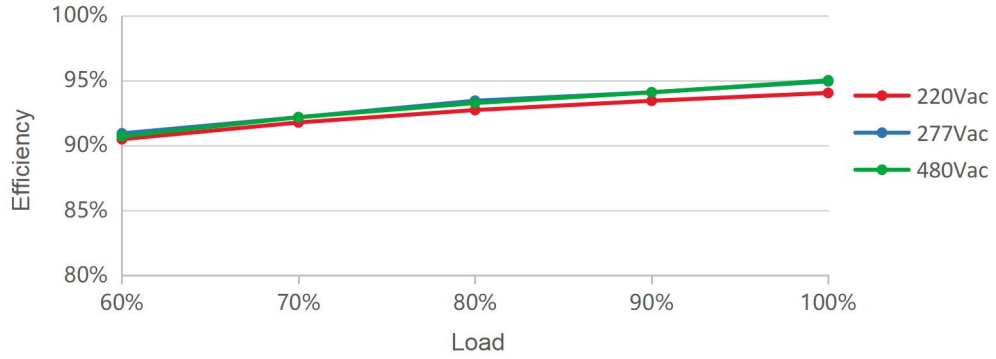

PF vs. Load

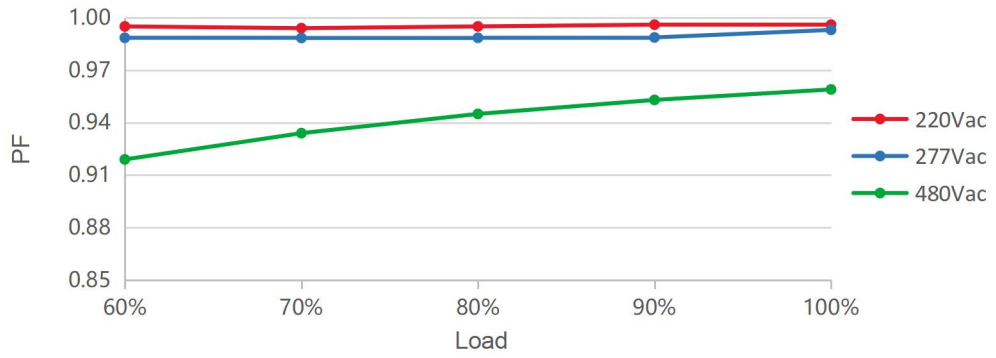

THD vs. Load

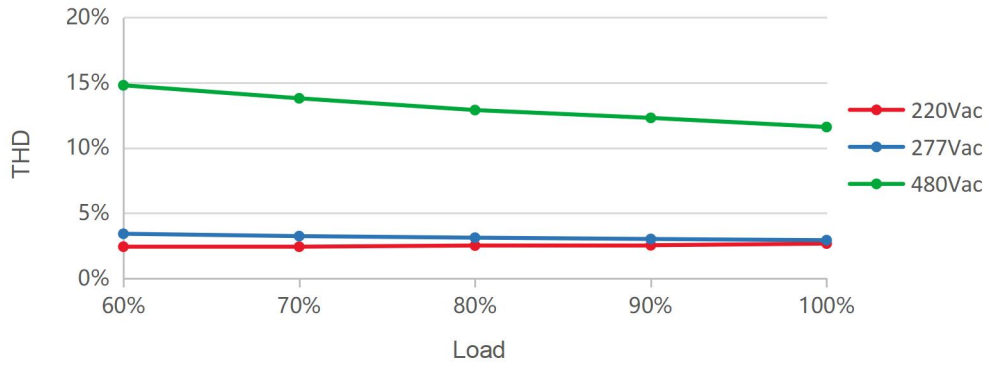

Output Power vs. Ambient Temperature

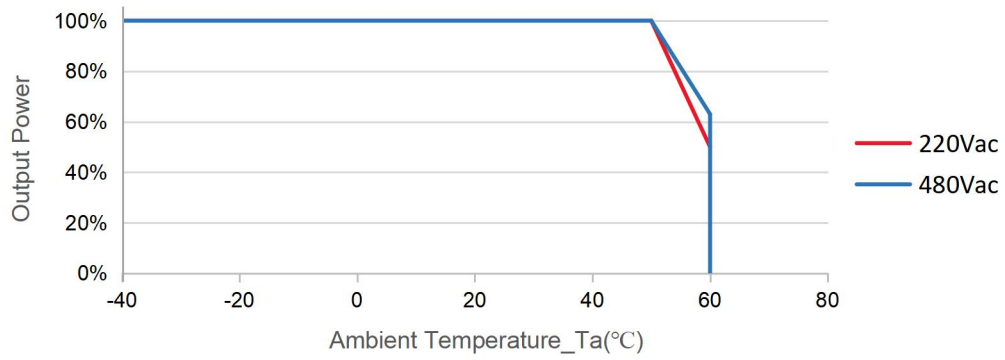

Lifetime vs. Case Temperature

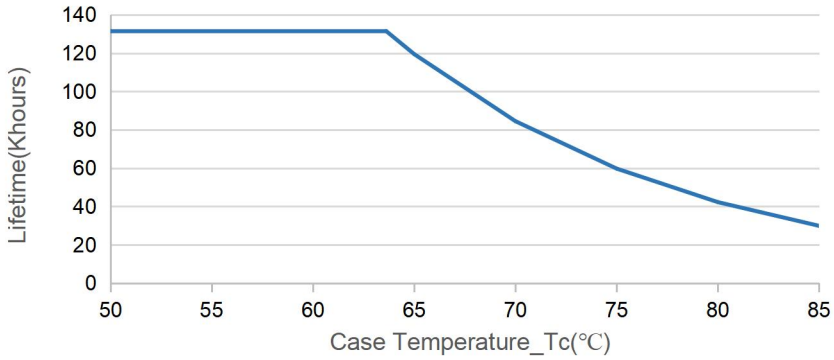

DMX Dimming

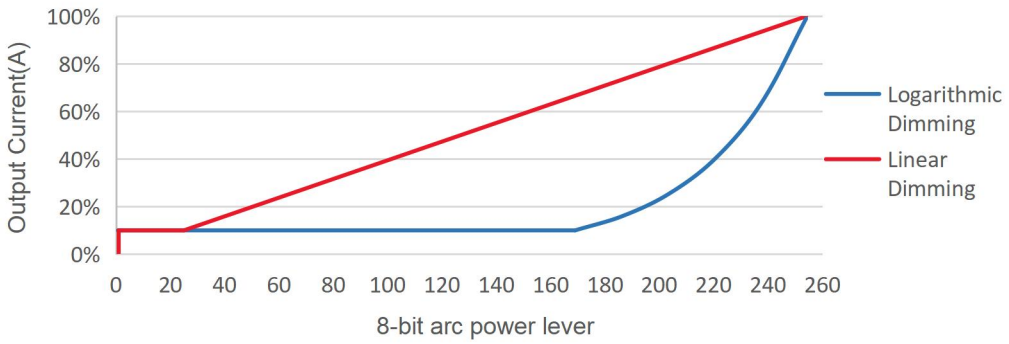

Note:

Factory Default Linear Dimming Curve.

Implementation:DMX512 Daisy chain

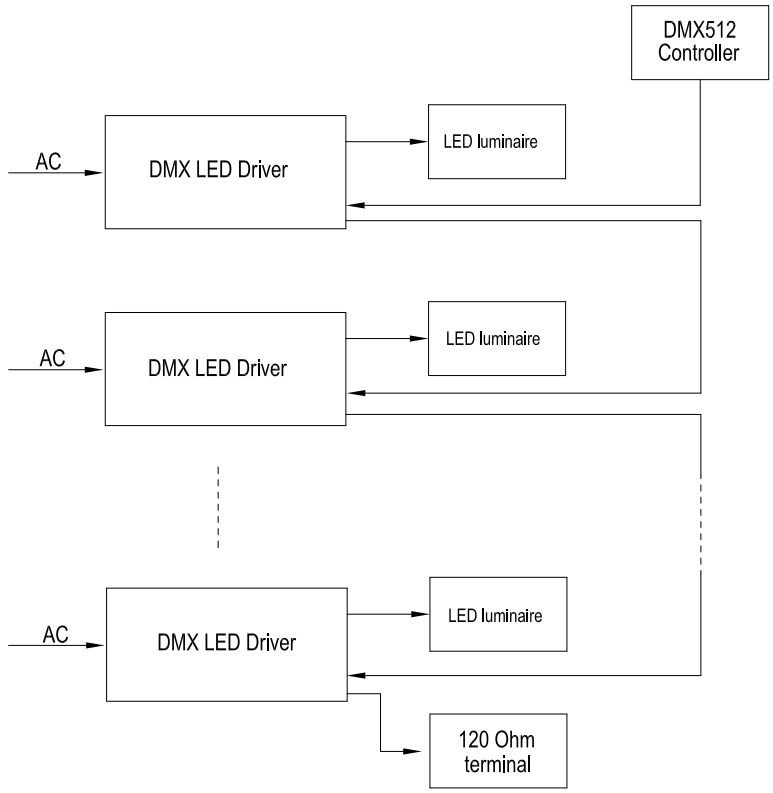

Note:

[1].Up to 32 drivers may be daisy-chained, terminated by a 120 ohm resistor (connected between DMX+ & DMX- as the last driver).

[2].300m maximum length.

[3].100m maximum between drivers.

[4]. For best performance, a characteristic impedance of 120 ohms should be maintained for the entire length of the control line.

Programming Link (DMX)

1.Programming mode

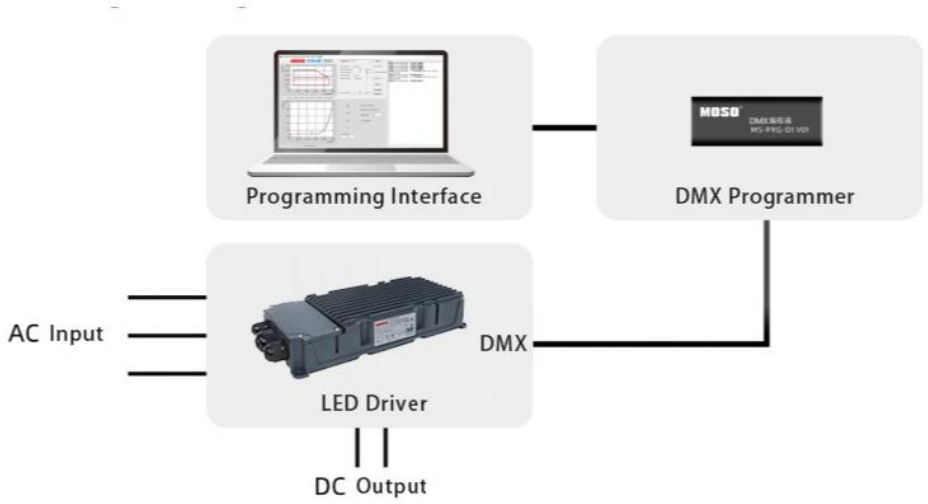

2.Operating instructions

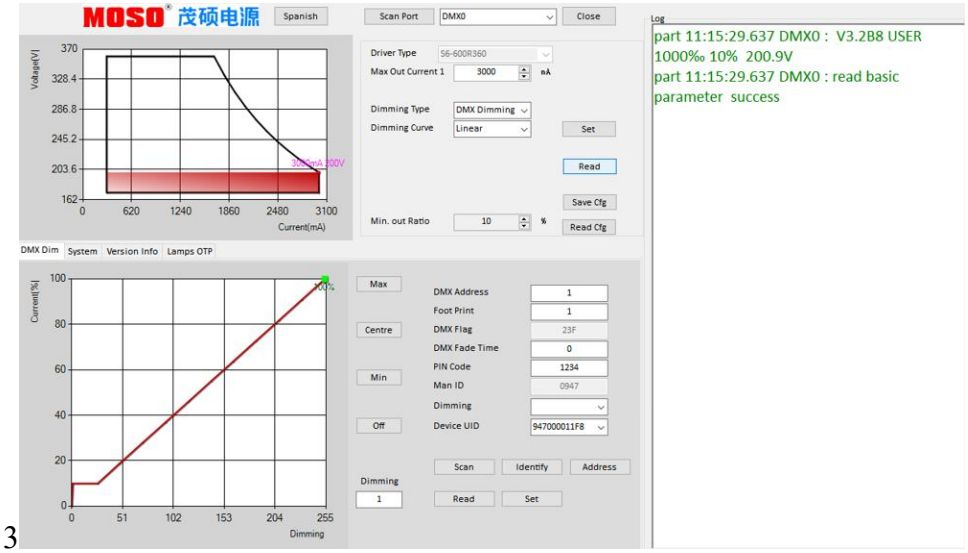

3

DMX visual software programming

1.The current parameters and configured driving parameters can be read;

2.Time dimming. Set the timing control function, which supports 7 segments at most;

3.CLO;

4.Power protection. The power protection parameters can be set according to the actual needs of customers.

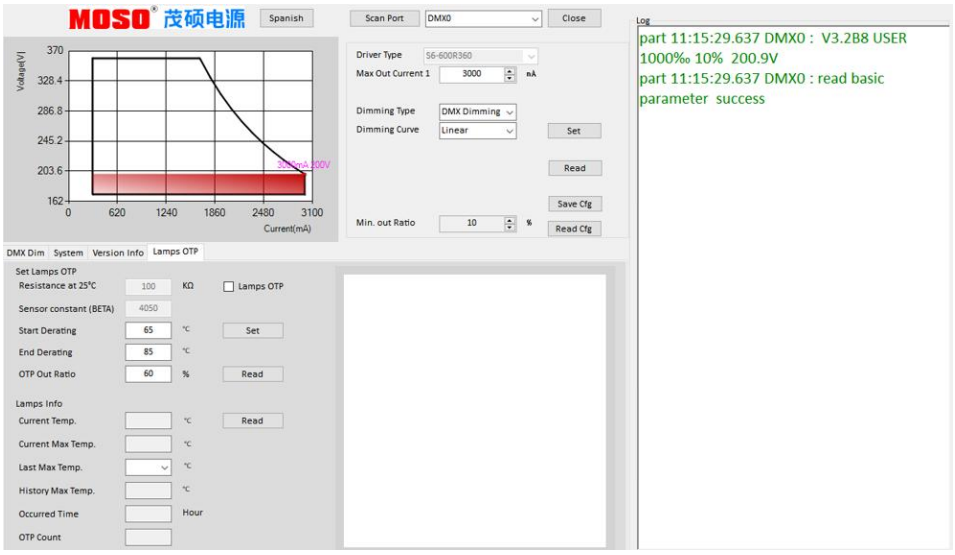

The recommended value of NTC resistance is 100K Ω, BETA: 4050

NTC resistance value changes with temperature:

40℃	48.6Ω-58.8KΩ;
60℃	21.8Ω-26.3KΩ;
65℃	18.1Ω-22.1KΩ;
70℃	15.1Ω-18.6KΩ;
75℃	12.7Ω-15.8KΩ;
80℃	10.7Ω-13.4KΩ;
85℃	9.1Ω-11.5KΩ;

Mechanical Outline

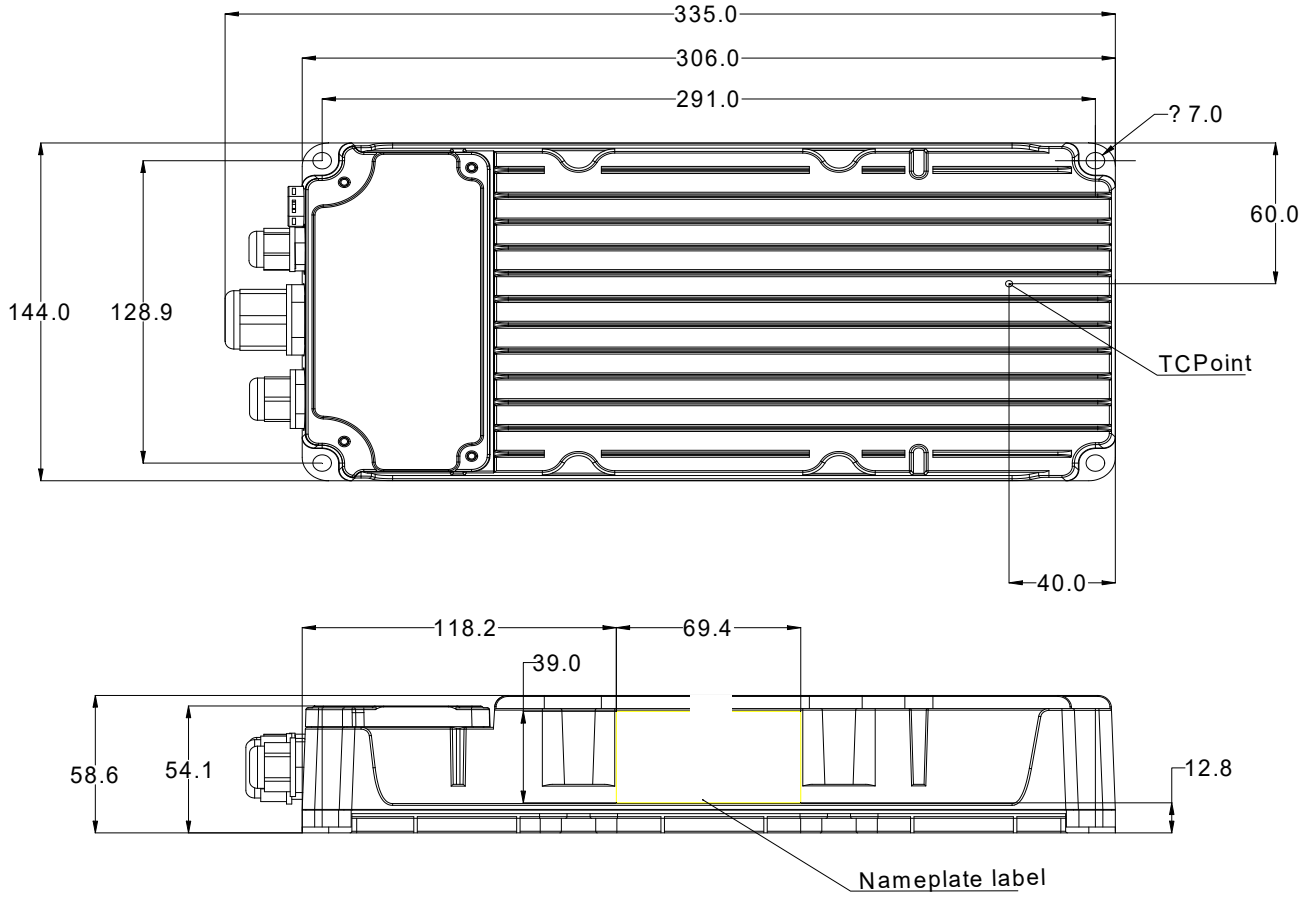

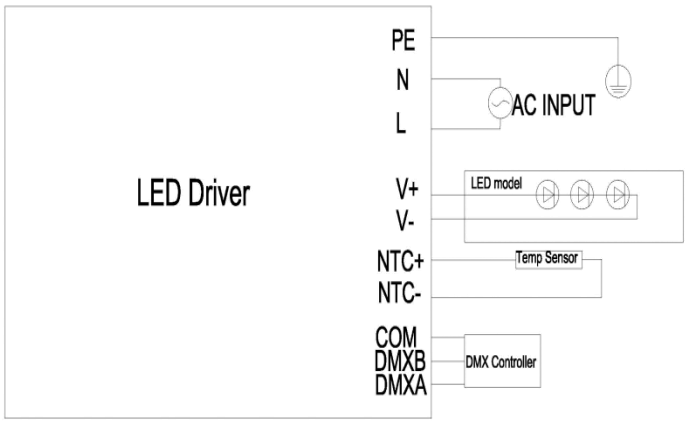

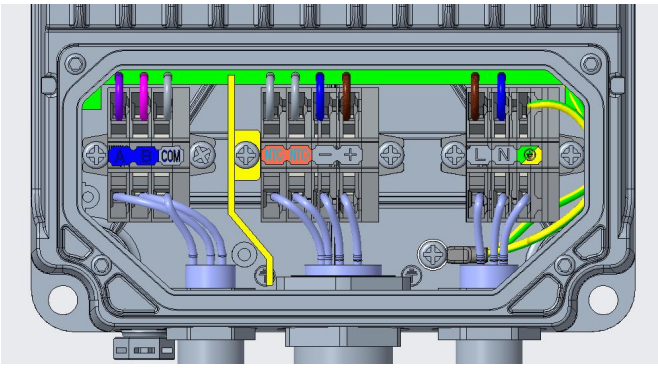

Connections

Wire	Recommended wire Specification	Note
Input (L,N,G)	H07RN-F,Minimum wire diameter 3*1.0mm^2 , The maximum wire diameter 3*2.5 mm^2	
Output, NTC	H07RN-F,Minimum wire diameter 4*1.0mm^2 , The maximum wire diameter 4*2.5 mm^2	
Dimming(DMX)	H07RN-F,Minimum wire diameter 3*1.0mm^2 , The maximum wire diameter 3*2.5 mm^2	

Terminal	Recommended wire Specification	Note
Input	PG13.5,the torsion 1.3-1.6N.m Minimum wire diameter 6mm , The maximum wire diameter 11mm	
Input	PG13.5,the torsion 1.3-1.6N.m Minimum wire diameter 8mm , The maximum wire diameter 12mm	
Output, NTC	PG19,the torsion 2.2-2.5N.m Minimum wire diameter 12mm , The maximum wire diameter 15mm	
Dimming(DMX)	PG9, the torsion 1.2-1.4N.m Minimum wire diameter 4.5mm , The maximum wire diameter 8mm	

Label

NOTE:

The output voltage range on the label is 172-360V, and the current range is 0.30-3.00A, which refers to the dimming range.

Shipping Barcode Label Standard

2	2	1	2	1	2	1	0	5	7	0	1	A	1	0	0	0	1
Year		month		day		Part of production order number					Engineering level	REVISION RR	Production line number	Progressive Serial number			

Version

A.2	First release	2023-05-08
B.2	ECL202310004	2023-10-08
C.2	ECL202310013	2023-11-02
D.2	ECL202401009	2024-01-09
E.2	ECL202403048	2024-03-21

Specification for Approval

Product Name: 600W Stadium Intelligent LED Driver

Product Model: S6-600R360

Rev: E.2

Address:XiLiSongbai Road 1061, Nanshan District, Shenzhen City, Guangdong, China
Tel: 0755-27657000
FAX: 755-27657908
E-mail:info@mosopower.com
Web Site:http://www.mosopower.com

Prepared By	Checked By	Approved By

Specification for Approval

Product Name: 600W Stadium Intelligent LED Driver

Product Model: S6-600R360

Rev: E.2

CUSTOMER AUTHORIZED SIGNATURE		
Tested By	**Checked By**	**Approved By**
(Company seal)Return one copy to MOSO with approved signature and company seal.		

Address:XiLiSongbai Road 1061, Nanshan District, Shenzhen City, Guangdong, China
Tel: 0755-27657000
FAX: 755-27657908
E-mail:info@mosopower.com
Web Site:http://www.mosopower.com

Prepared By	Checked By	Approved By