Product Datasheet

The global certified BLD-240-C is a dual stage high efficiency smart LED driver. 10kV surge protection level, 100khour long life and 7-year warranty provide high confidence to luminaire users. It supports not only traditional 4-in-1 control, but also DALI2.0 and other smart protocols. NFC and cable programming are both available for users. All around protections including digital OTP (internal and external by NTC) with auto-recovery secure 24hour non-stop operation for luminaires.

☑ Street ☑ Flood ☑ Tunnel ☑ Shoe box ☑ Architectural

- Features 2
- Model List 2
- Technical Data 3
- Safety/EMC Compliance 4
- Dimming 4
- Programming 6
- Lifetime vs. Case Temperature 8
- Power Factor vs. Load 8
- THD vs. Load 9
- Efficiency vs. Load 9
- Inrush Current 12
- Dielectric Strength 13
- Tc Point 13
- Packaging Information 13
- Mechanical Design 14
- Output Operation Range 19
- Revision History 22

Features

- Supply Voltage: 90-305Vac or 127-420Vdc, 380Vac for 2 hours
- Great Surge Immunity 10kV
- **-60℃ Cold Ambient Startup**
- 100,000Hour Life @ Tc=75℃
- 7 Year Warranty @ Tc<=75℃
- Airset™ NFC Programmability
- +/-2% Output Current Accuracy (Programmable Model)
- Isolated 0-10V/PWM/Time/DALI2.0 (Optional) Dimmable
- Dim Off with 0.5W Standby Power
- 12V 300mA Auxiliary Power to Power Controllers and Fans (Optional)
- UL Class P, ENEC/CB/CCC SELV Output
- Global Certified Model Available
- Safety according to UL8750, EN 61347-1, 61347-2-13, 62384

Model List

Model Number	Input Voltage Range	Output Power	Output Voltage	Full Power Settable Current Min	Full Power Settable Current Max
BLD-240-C105-XYZ	90 ~ 305 Vac	250 W	143-357Vdc	700mA	1050mA
BLD-240-C140-XYZ	90 ~ 305 Vac	250 W	107-238Vdc	1050mA	1400mA
BLD-240-C210-XYZ	90 ~ 305 Vac	250 W	71-179Vdc	1400mA	2100mA
BLD-240-C280-XYZ	90 ~ 305 Vac	250 W	50-114Vdc	2100mA	2800mA
BLD-240-C420-XYZ	90 ~ 305 Vac	250 W	36-89Vdc	2800mA	4200mA
BLD-240-C690-XYZ	90 ~ 305 Vac	250 W	22-56Vdc	4500mA	6900mA

XY=	Dimming Method	Programmable	12Vaux	Dim-off
NN	-	-	-	-
DN	0-10V/PWM/Time	Cable	-	No Dim-off as default status, programmed to have Dim-off
EN	0-10V/PWM/Time	Cable	300mA	√
TR	Time/Set Current	NFC Wireless	-	-
DR	0-10V/PWM/Time	NFC Wireless	-	No Dim-off as default status, programmed to have Dim-off
ER	0-10V/PWM/Time	NFC Wireless	300mA	√
AR	DALI2.0	NFC Wireless	-	√
MR	DMX512 + RDM	NFC Wireless	-	√

Z=	U	V	S	S-GLB000	W	D
Input Cable	3 pin UL cable with ground	3 pin UL cable with ground	3 pin VDE cable with ground	3 pin Global cable without ground	3 pin VDE cable with ground	2 pin VDE cable without ground
Output Cable	2 pin UL cable without ground	3 pin UL cable with ground	2 pin VDE cable without ground	2 pin Global cable with ground	3 pin VDE cable with ground	2 pin VDE cable without ground
Certified Input Voltage Range	UL Listed Class P FCC 120-277Vac	UL Listed Class P FCC 120-277Vac	ENEC CB RCM Class I 220-277Vac	UL Recognized 120-277Vac ENEC CB RCM Class I 220-277Vac	Class I 120-277Vac	ENEC CB Class II 220-277Vac

Technical Data

Input Voltage	90～305Vac or 127V-420Vdc, 380Vac for 2 hours
Input Frequency	47～63Hz
Power Factor	>0.95@60-100%load, refer to PF vs. Load curve
THD	<15%@60-100%load, refer to THD vs. Load curve
Input Current	2.2Amax@120Vac & Full-Load, 1.1Amax@220Vac & Full-Load
Inrush Current	See Inrush Current Section in the datasheet
Leakage Current	0.75MIU max @277Vac 60Hz, UL8750 0.7mA max @240Vac 50/60Hz, IEC60598-1
Input Under Voltage	Shut down and auto-restart
Surge Protection	Line to line 6kV, line to ground 10kV, IEC 61000-4-5
Current Accuracy	±2%Io for programmable model, ±5%Io for non-programmable model
Ripple Current	Ip-p:5%Io max
Setup Time	1.2s max
Overshoot	10% Io max & LED Load
Output Over Voltage	120% Vomax, typ.
Short Circuit	Auto recovery. The output recovers when short is removed.
Over Temperature	Lower the output current when Tc≧105±10℃; Auto Recovery When Tc≦70±10℃
Auxiliary Power (Vaux)	12V+/-5%, 300mA max
Operating Temperature	Case Temperature Tc=-60℃～+90℃； 10%RH～100%RH
Storage Temperature	-40℃～+85℃； 5%RH～100%RH
MTBF	≥280,000 hours, 75℃ case temperature (MIL-HDBK-217F)
Lifetime	≥100,000 hours, 75℃ case temperature, refer to life vs. Tc curve
Case Temperature	90℃ max, marked in the Tc point of label
Dimensions	8.46x2.66x1.32 by inch (body), 9.52x2.66x1.32 by inch (endcaps included)
	215.0x67.5x33.5 by mm (body), 242.0x67.5x33.5 by mm (endcaps included)
Net Weight	1100g
Packing	See Package Information Section in the datasheet

Notes: Unless specified, all the test results are measured in 25℃ room temperature.

Safety/EMC Compliance

Safety Standards	Description
UL8750	Light emitting diode(LED) equipment for use in lighting products
UL1012/1310	Power units other than class 2 / Class 2 power units
IEC 61347-1	Lamp control gear Part 1: general and safety requirements
IEC 61347-2-13	Lamp control gear Part 2-13: particular requirement for d.c. or a.c. supplied electronic control gear for LED modules
IEC 62384	DC or AC supplied electronic control gear for LED modules - Performance requirements
IEC 55015/FCC Part 15	Conducted emission test & radiated emission test; ANSI C63.4:2009 Class B
IEC 61000-3-2	Harmonic current emissions; Class C
IEC 61000-3-3	Voltage fluctuations & flicker
IEC 61000-4-2	Electrostatic discharge (ESD): 8 kV air discharge, 4 kV contact discharge
IEC 61000-4-3	Radio frequency electromagnetic field susceptibility test (RS)
IEC 61000-4-4	Electrical fast transient (EFT)
IEC 61000-4-5	Surge immunity test
IEC 61000-4-6	Conducted radio frequency disturbances test (CS)
IEC 61000-4-8	Power frequency magnetic field test
IEC 61000-4-11	Voltage dips
IEC 61547	Electromagnetic immunity requirements applies to lighting equipment

Dimming

Parameter	Min.	Typ.	Max.
Vdim Sourcing Current	100uA	150uA	200uA
Vdim Allowed Input Voltage	-20 V		20 V
0-10V Dimming Range	10% (Vdim=1V)	Linear	100% (Vdim=9~10V)
PWM Dimming Range	10% (Duty=10%)	Linear	100% (Duty=90-100%)
Default Dim off Threshold	0.4V or 4%	0.5V or 5%	0.6V or 6%
Default Dim off Threshold	0.6V or 6%	0.7V or 7%	0.8V or 8%
PWM High	3.8V		9V
PWM Low	0V		0.6V
PWM Frequency	300Hz		2kHz
DALI Interface Standard		IEC62386, part 101,102,207	
DA1,DA2 High Level	9.5	16	22.5
DA1,DA2 Low Level	-6.5	0	6.5
DA1,DA2 Current	0		2mA
DMX+ & DMX- Voltage	-6V		6V
DMX to Ground Resistance	25Mohm		
Logic 0/1 (DMX+ to DMX-) Threshold		0.2V	
Communication Baud Rate		250kbps	
Fast Dimming[1] On-Off Transition		300ms	
Fast Dimming 10-100% Io Transition		70ms	

Notes [1]: Fast dimming feature is only available by models with -FD0000 suffix.

- **Default Dimming Curves**

a. 0-10V dimming without dim-off

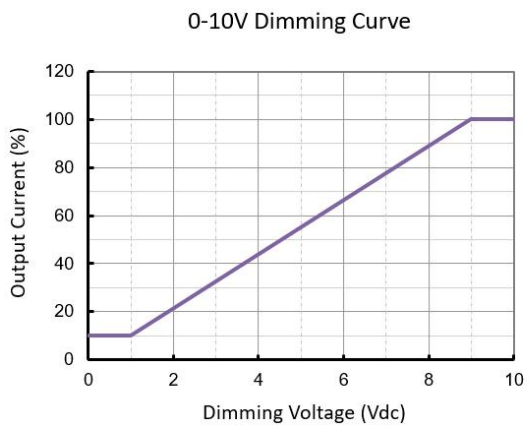

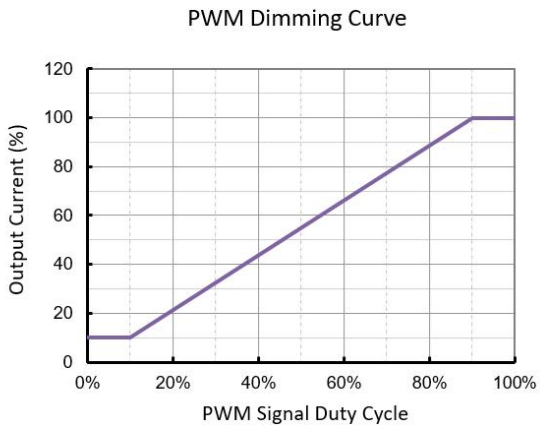

b. 0-10V dimming with dim-off

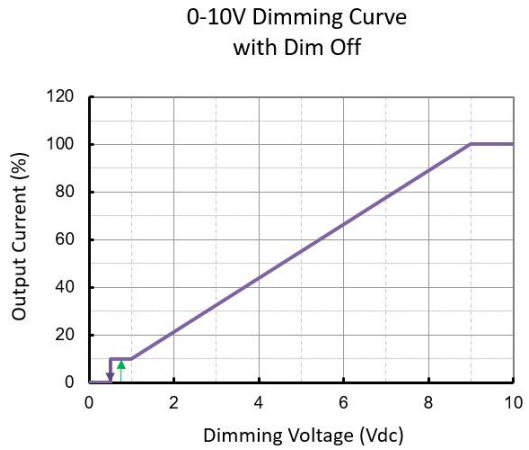

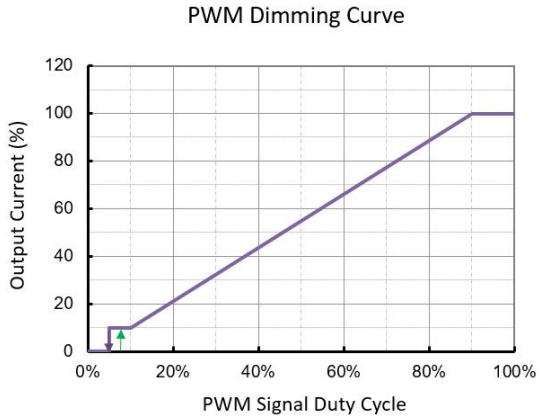

c. DALI and DMX dimming curves

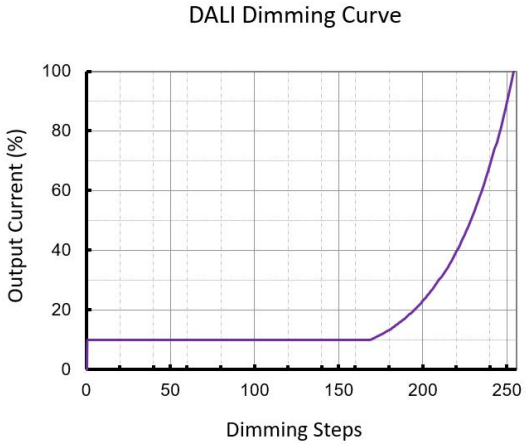

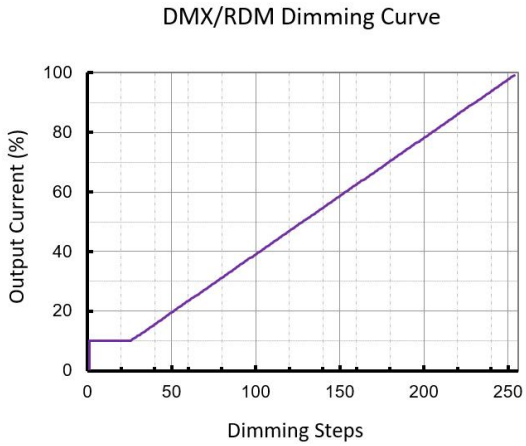

Note: Both DALI and DMX dimming curves can be customized to be linear or logarithmic as default.

Programming

- **Programmable Functions**

uPowerTek LED drivers offer a range of configurable functions to meet specific lighting requirements. The Output Current, Dimming Mode, Dim Off/On Voltage Threshold, and Timer Dimming can be set as basic programming functions. Constant Lumen Output (CLO) can also be customized to ensure consistent light performance. Additionally, depending on the different product model numbers, users can benefit from programming Thermal Protection by external NTC (with extra cable), DALI/D4i Features, and DMX addressing.

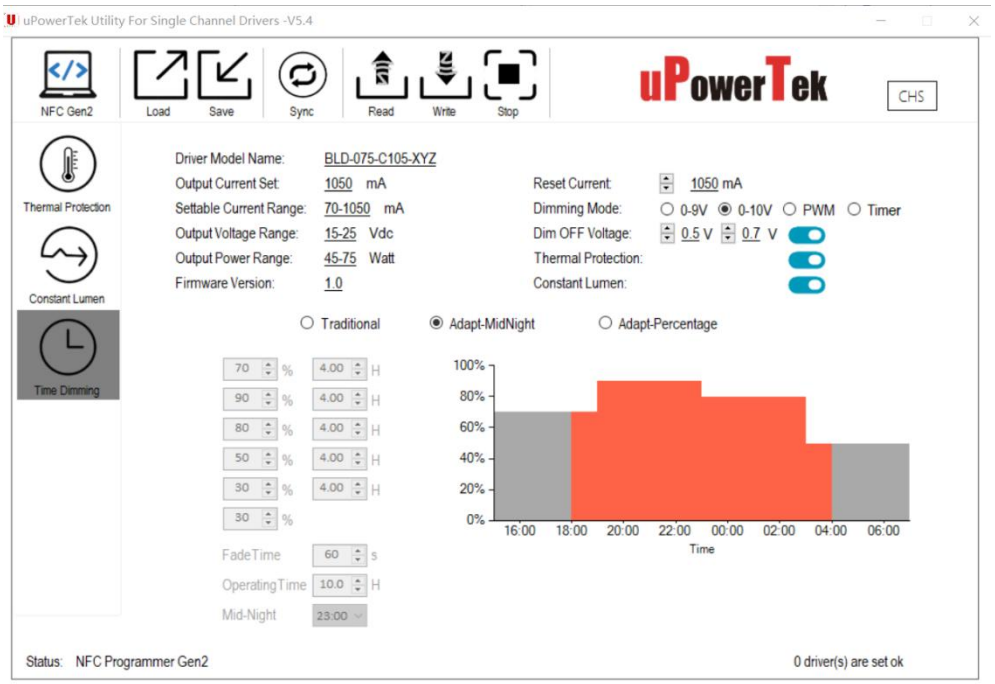

uPowerTek Programming Software Interface

- **Required Equipment**

To program uPowerTek LED drivers, users will need specific equipment based on their preferred method. For wired programming, the uPowerTek Cable Programmer is essential. For NFC wireless programming, users can use a smartphone with either IOS or Android, the uPowerTek NFC Programmer, or the FEIG NFC Programmers. These tools ensure a seamless and efficient setup process, realizing precise customization of the LED driver settings.

Cable Programmer

NFC Programmer V1

NFC Programmer V2

FEIG NFC Programmer

Android or iPhone

- **Connection Guide**

  This guide provides simple connection diagrams to help users understand the programming system. For more detailed operating instructions, including step-by-step procedures and additional configurations, please visit our website. You can download the comprehensive user manual and necessary software from the following link: https://www.upowertek.com/download-2/.

Wired Programming

Wireless Programming

Cellphone Programming

Lifetime vs. Case Temperature

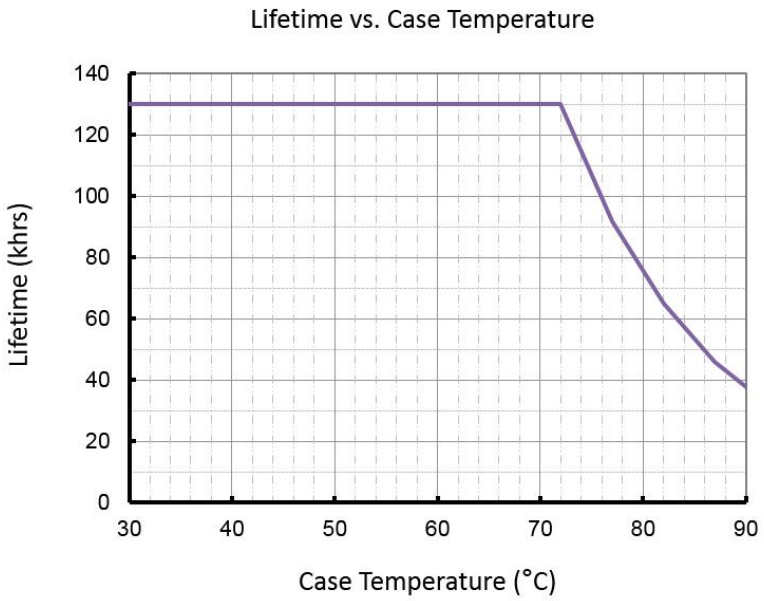

(End of Life: Maximum Failure Rate=10%)

Power Factor vs. Load

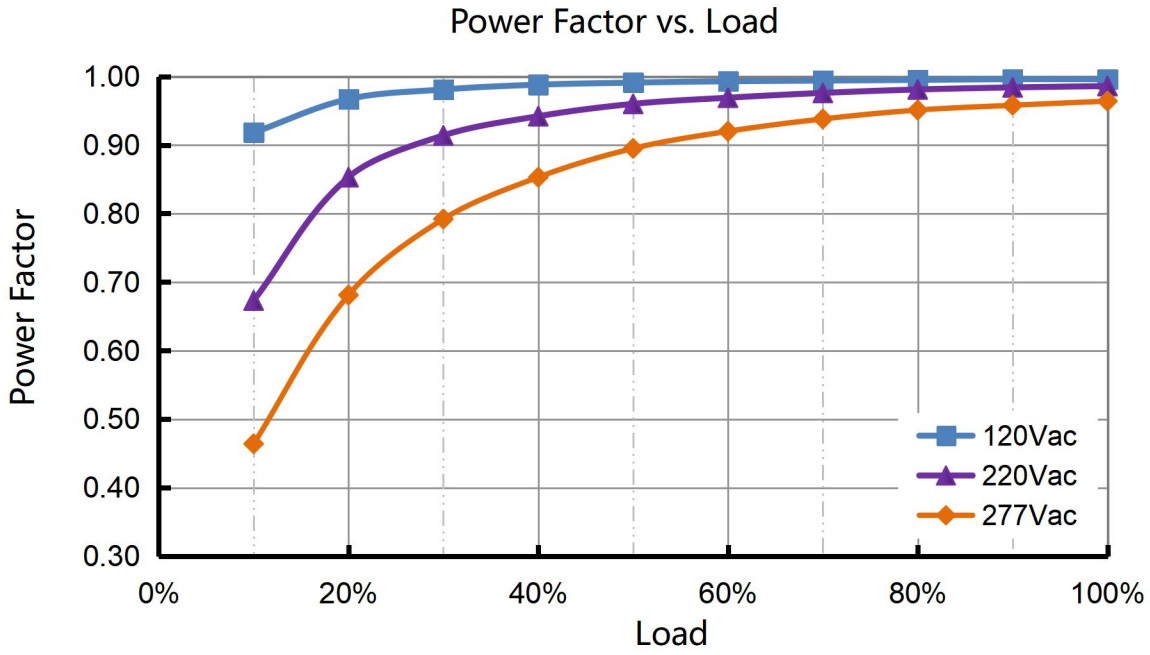

THD vs. Load

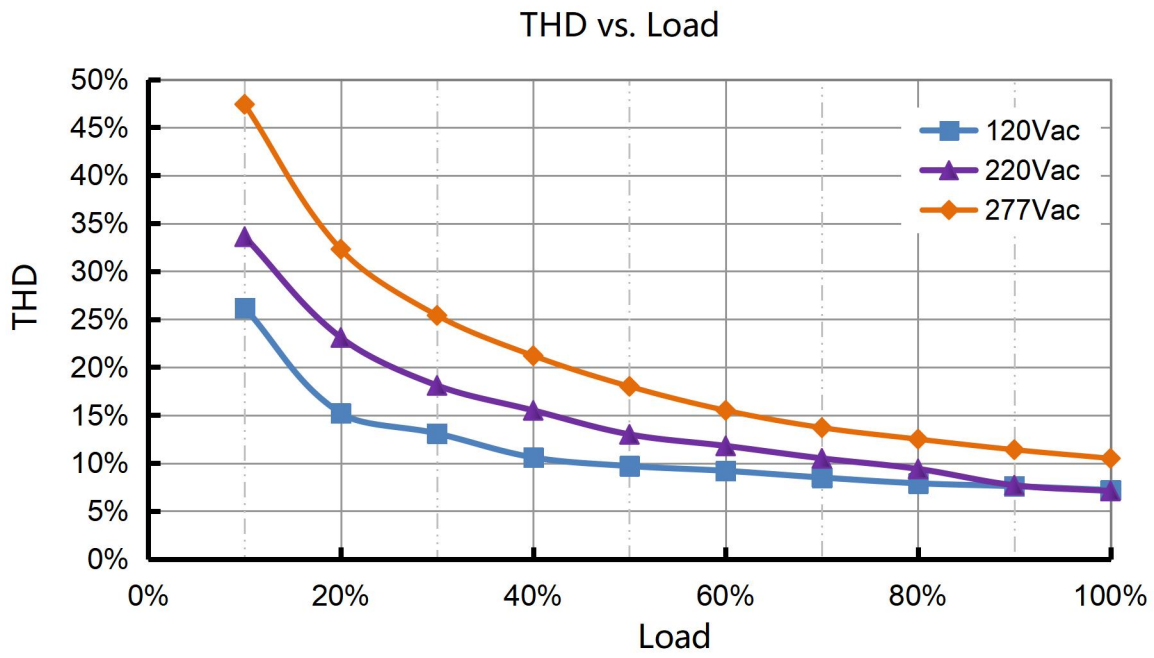

Efficiency vs. Load

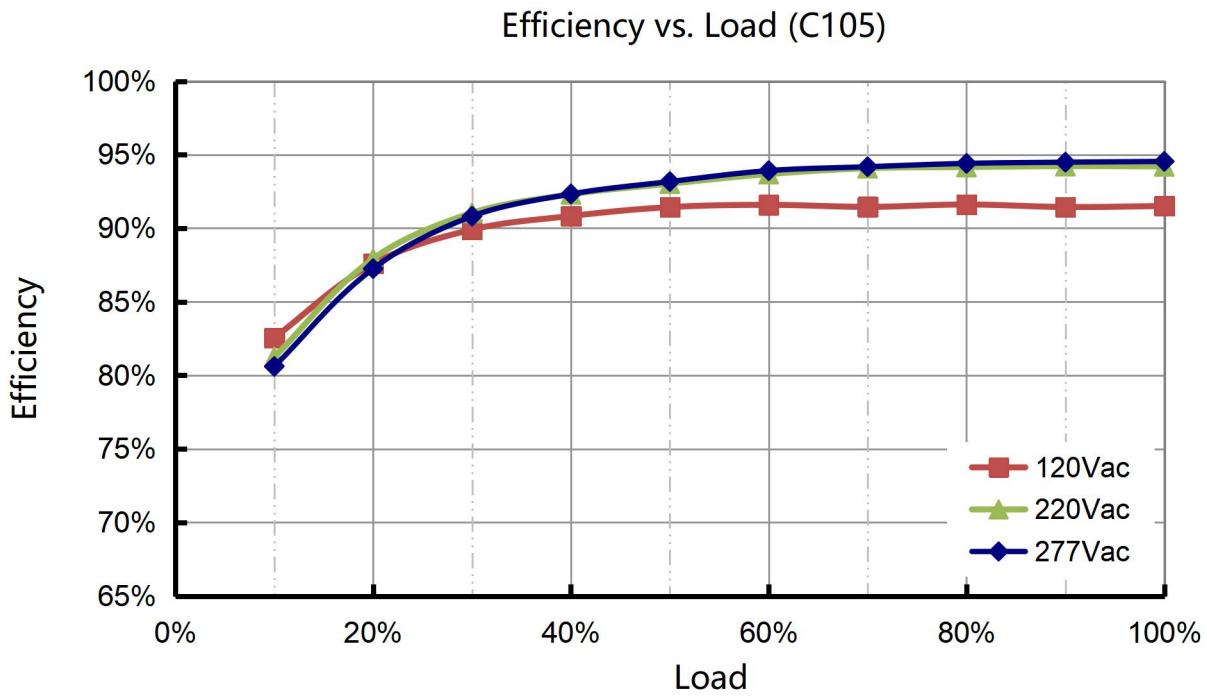

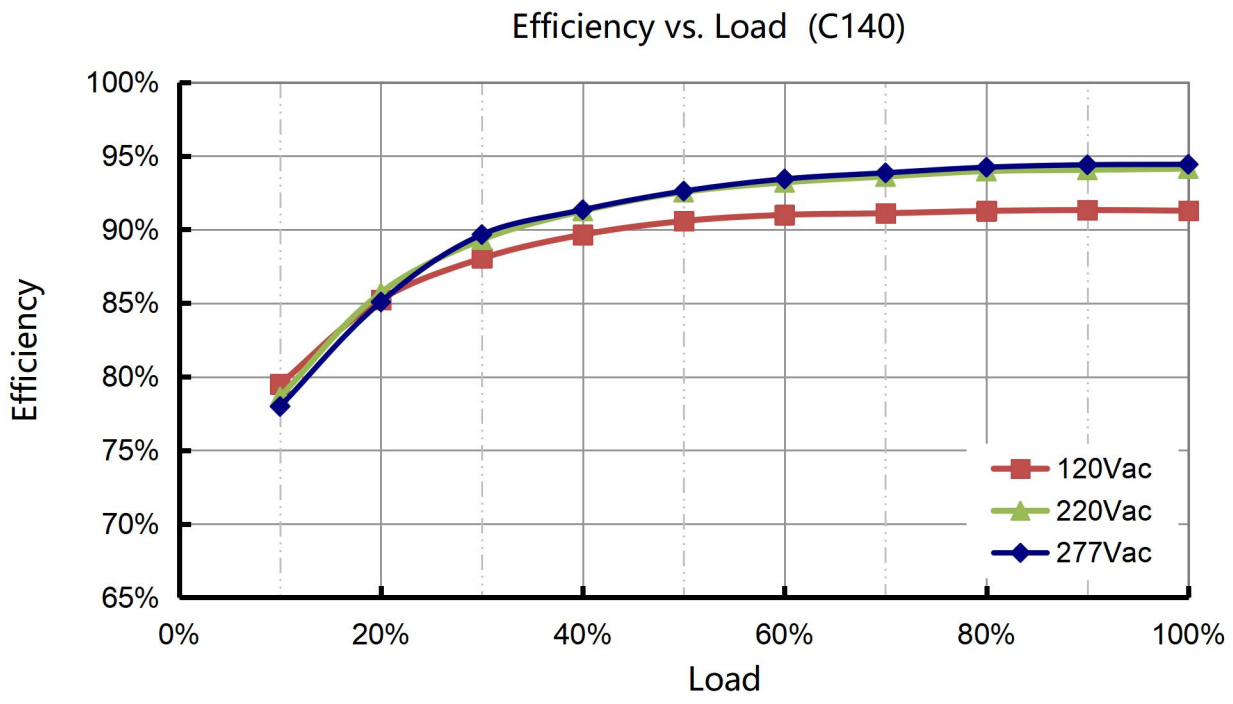
Efficiency vs. Load (C140)
100%
95%
90%
85%
80%
75%
70%
65%
Efficiency
0%
20%
40%
60%
80%
100%
Load
120Vac
220Vac
277Vac

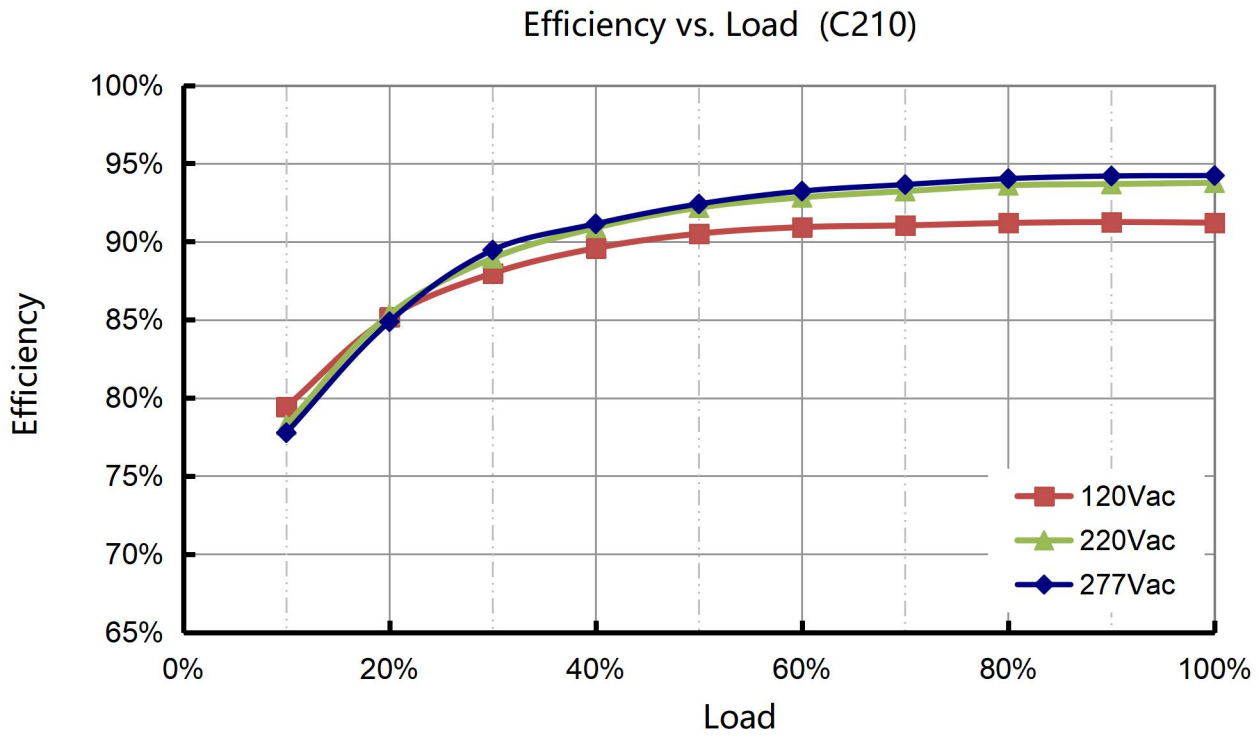
Efficiency vs. Load (C210)
100%
95%
90%
85%
80%
75%
70%
65%
Efficiency
0%
20%
40%
60%
80%
100%
Load
120Vac
220Vac
277Vac

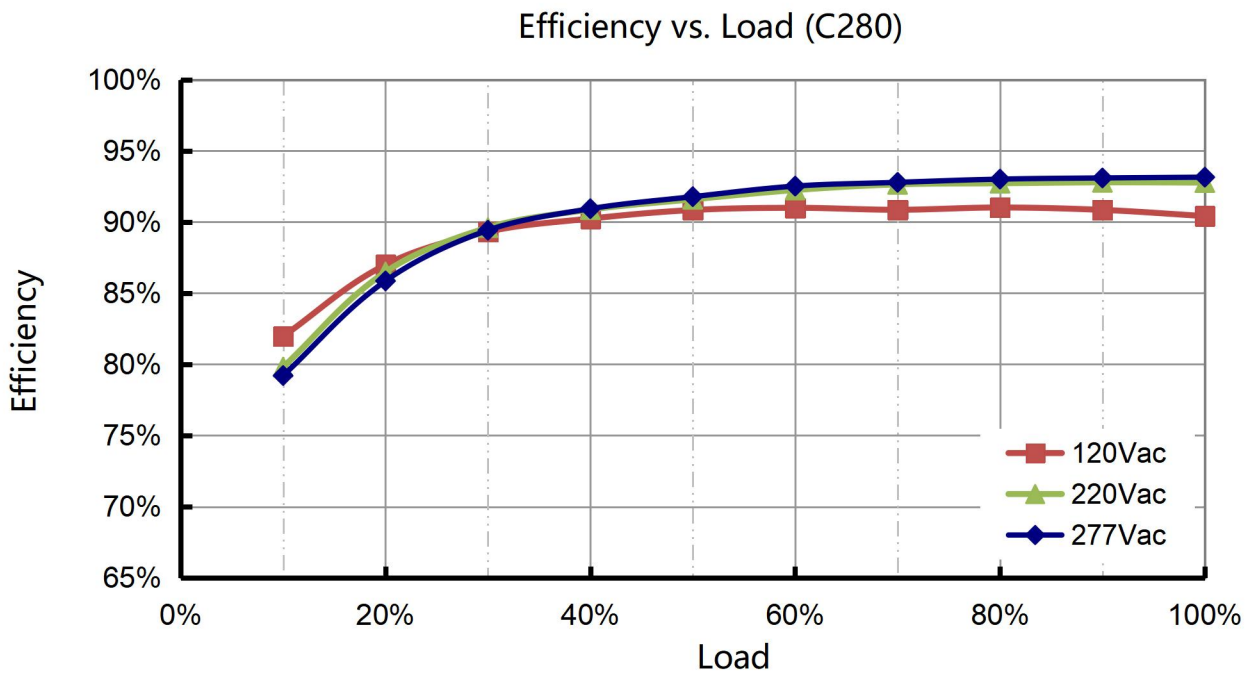
Efficiency vs. Load (C280)
100%
95%
90%
85%
80%
75%
70%
65%
Efficiency
0%
20%
40%
60%
80%
100%
Load
120Vac
220Vac
277Vac

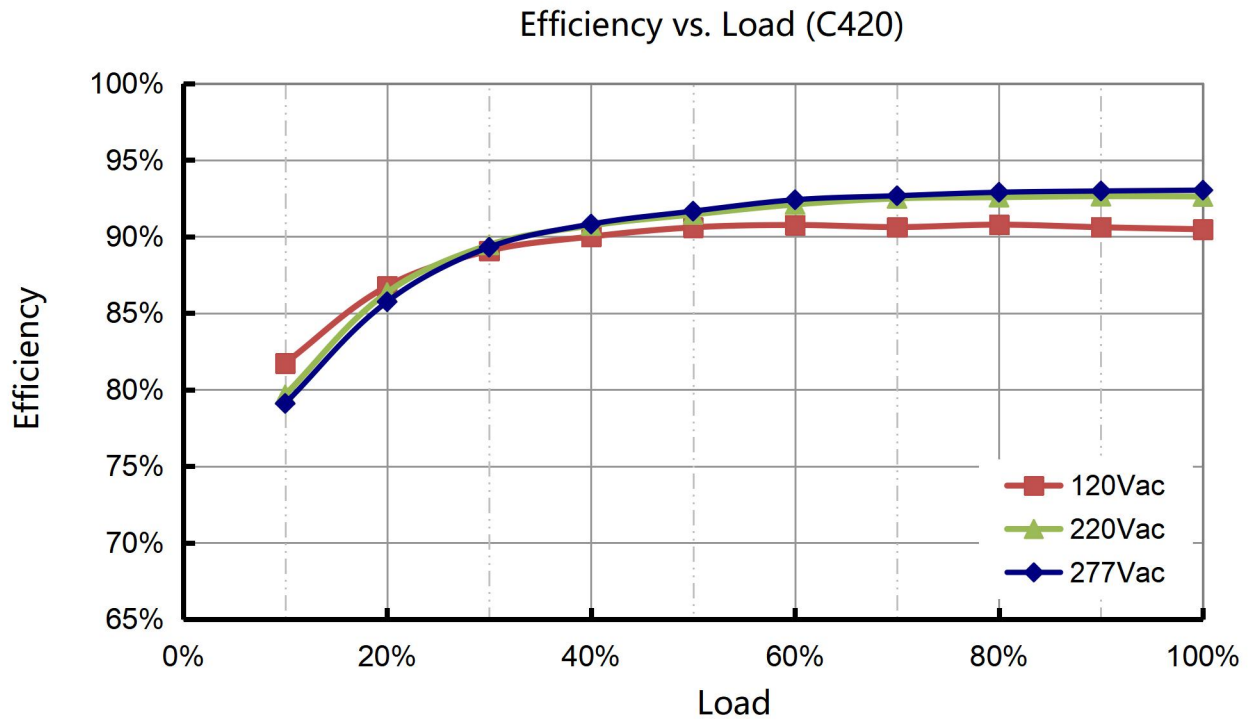
Efficiency vs. Load (C420)
100%
95%
90%
85%
80%
75%
70%
65%
Efficiency
0%
20%
40%
60%
80%
100%
Load
120Vac
220Vac
277Vac

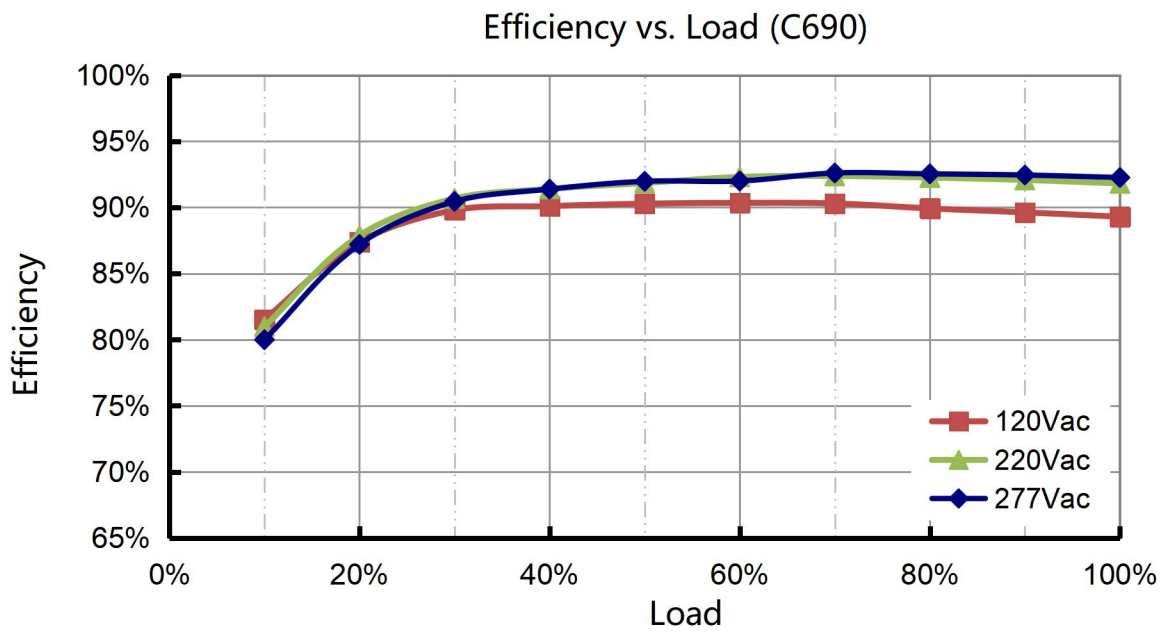

Inrush Current

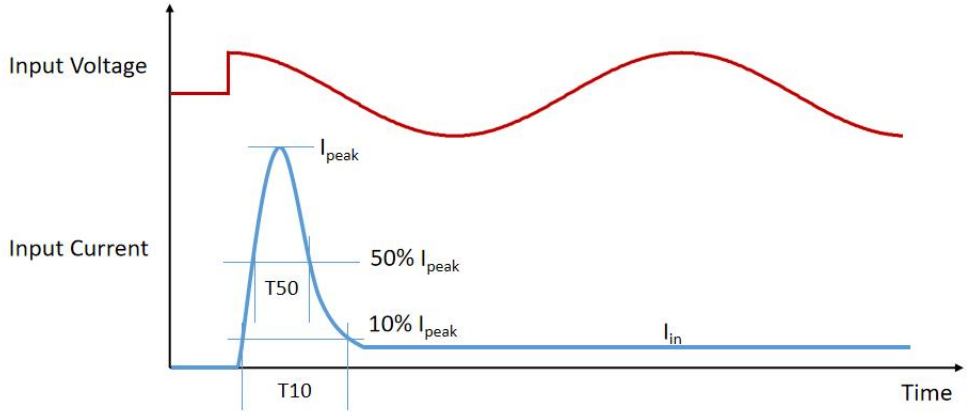

Input Voltage	I_{peak}	10% -10% T10 Duration	50% -50% T50 Duration
120Vac	33.4A	1.28ms	0.55ms
220Vac	66.0A	1.14ms	0.5ms
277Vac	80.8A	1.12ms	0.5ms

- MCB Suggestion

Type	B10	B16	B25	B32	C10	C16	C25	C32	D10	D16	D25	D32
Driver Quantity	2	3	5	7	3	6	9	12	6	10	16	21

Note: Calculated with MCB S200 series manufactured by ABB at 230Vac Input condition

Dielectric Strength

Unit: Vac	Input	Output	Dimming	Case
Input	-	3750	3750	1554
Output	3750	-	1554	1554
Dimming	3750	1554	-	1554
Case	1554	1554	1554	-

Tc Point

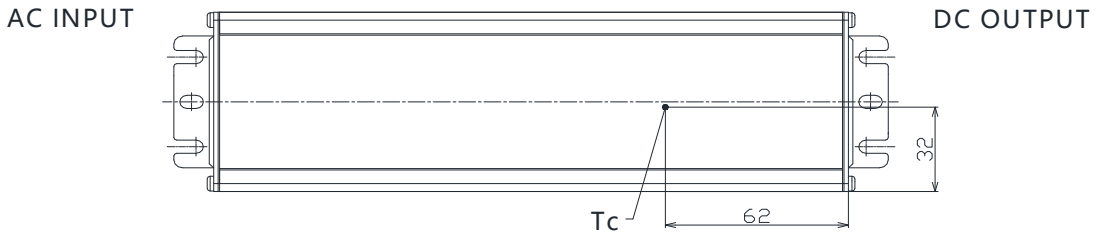

Packaging Information

Typical Carton Dimension(L×W×H)	490×370×115 mm
Positioning plate	2pcs/carton
Shield Board	1pcs/carton
LED Drivers/LED	10pcs/carton
Net Weight	10.0 kg/carton
Gross Weight	10.9 kg/carton

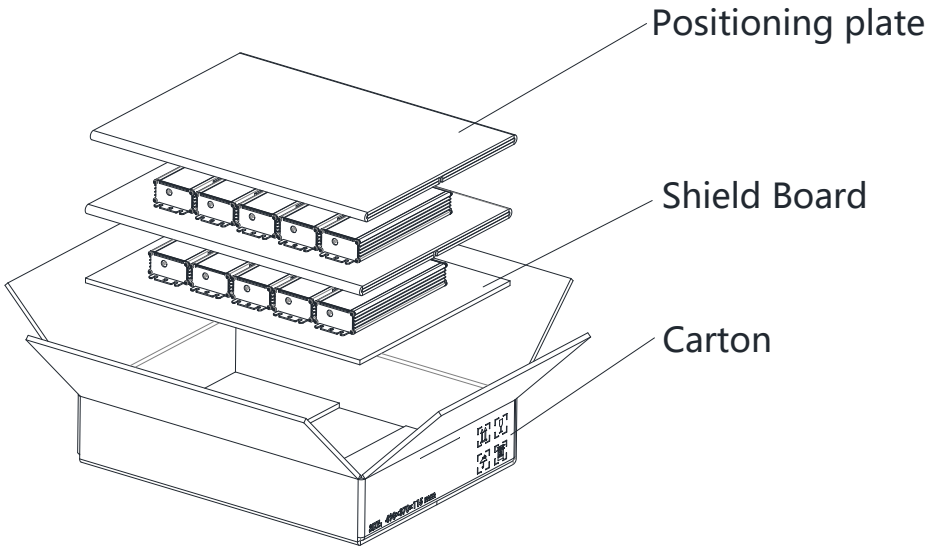

Mechanical Design

- **BLD-240-Cxxx-NN/TRU (UL Cable)**

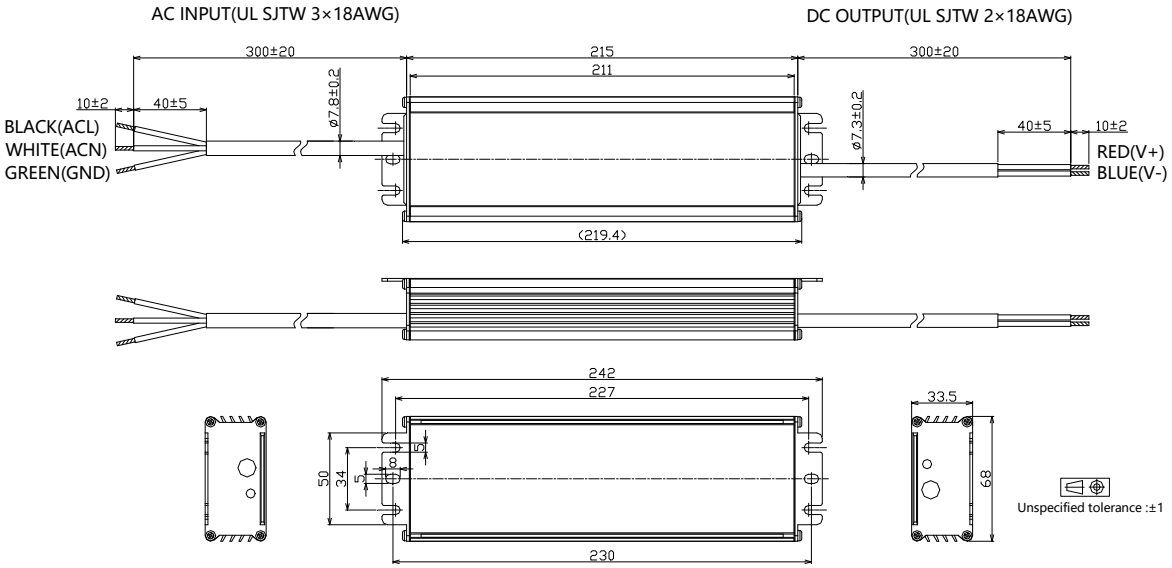

- **BLD-240-Cxxx-DN/DRU (UL Cable)**

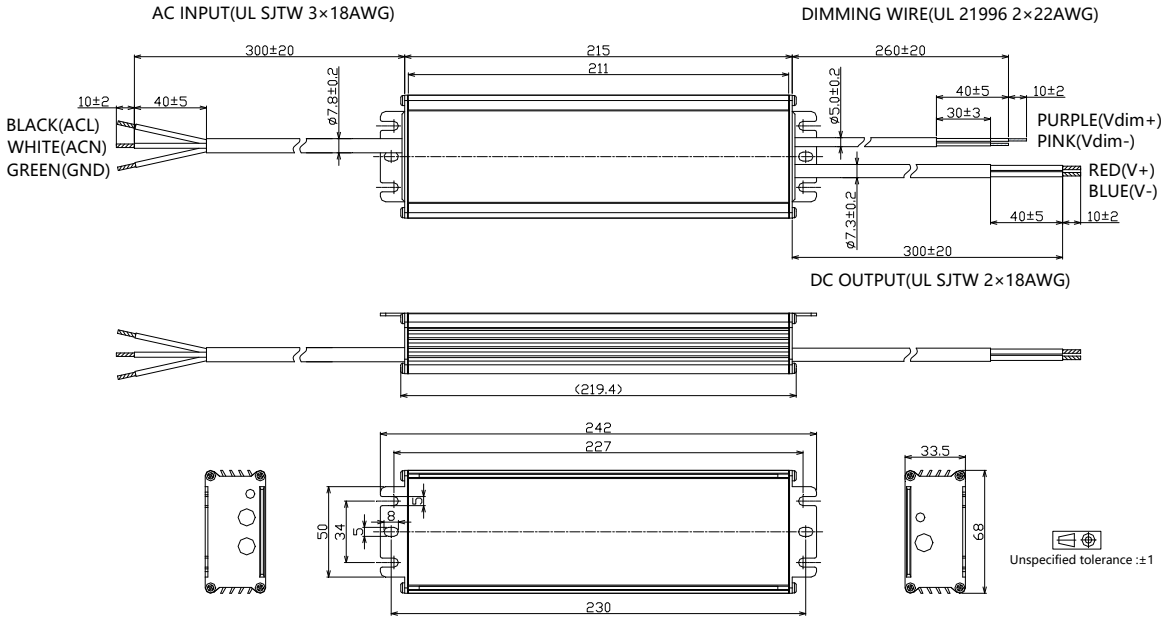

- **BLD-240-Cxxx-ERU (UL Cable)**

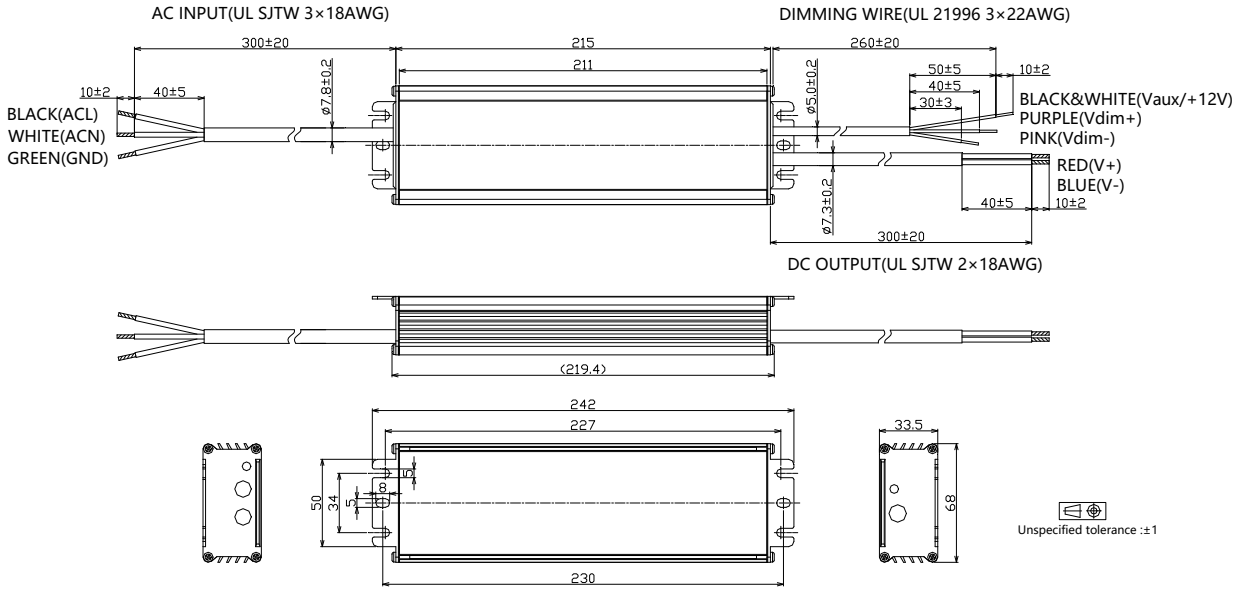

- **BLD-240-Cxxx-ARU (UL Cable)**

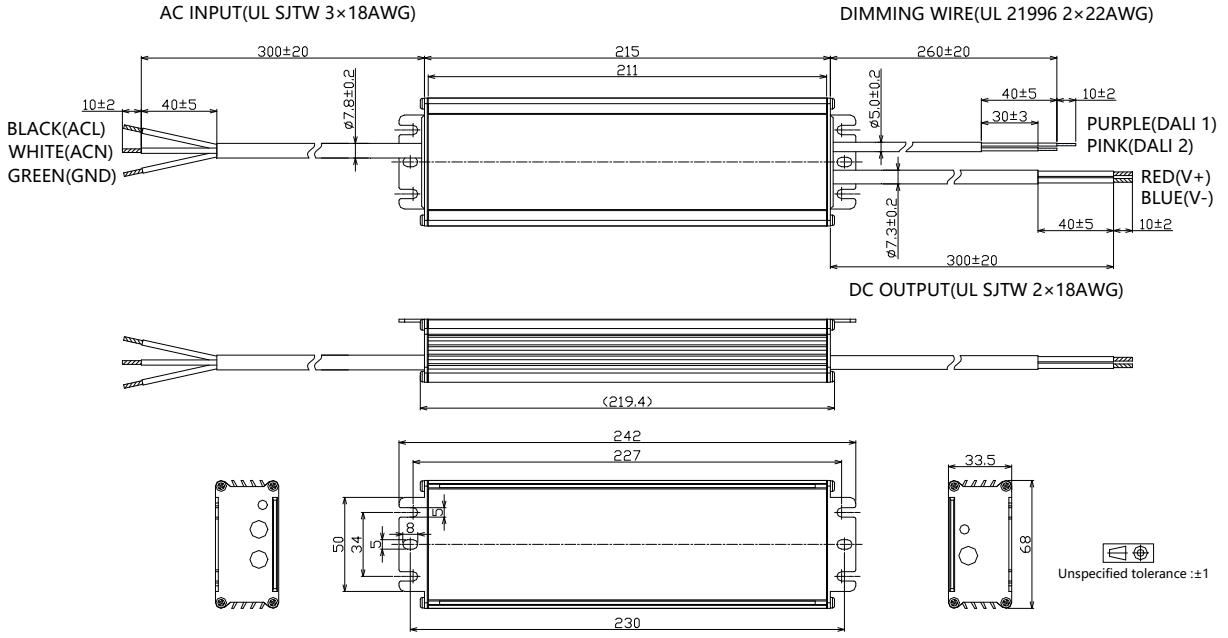

- **BLD-240-Cxxx-MRU (UL Cable)**

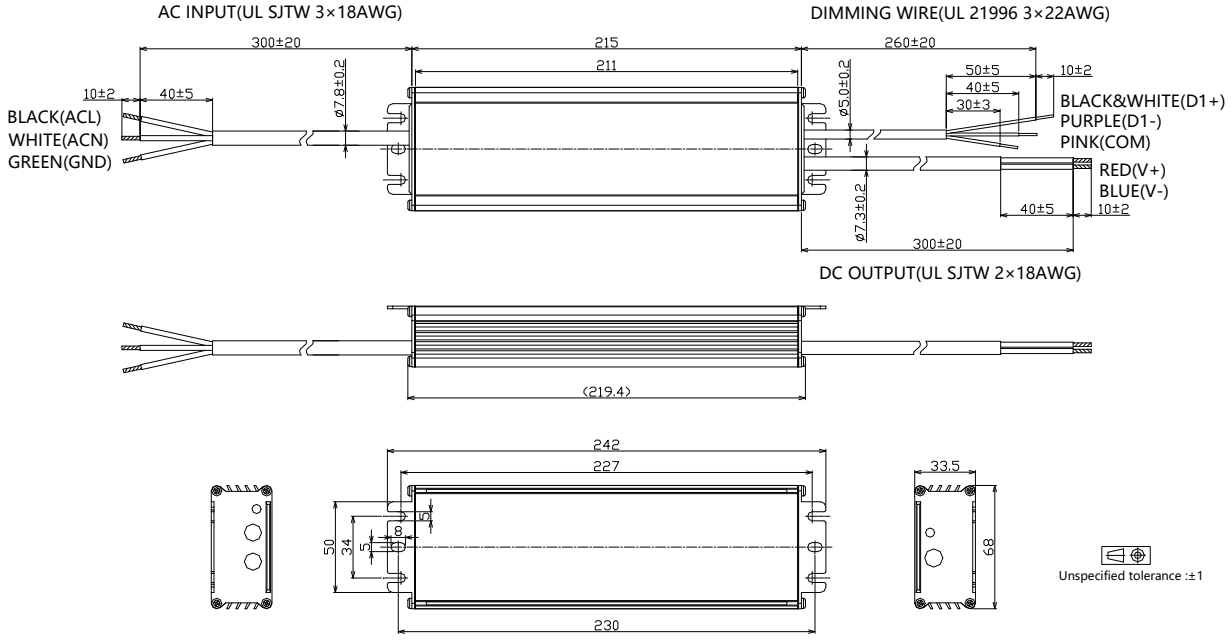

- **BLD-240-Cxxx-NN/TRS (VDE Cable)**

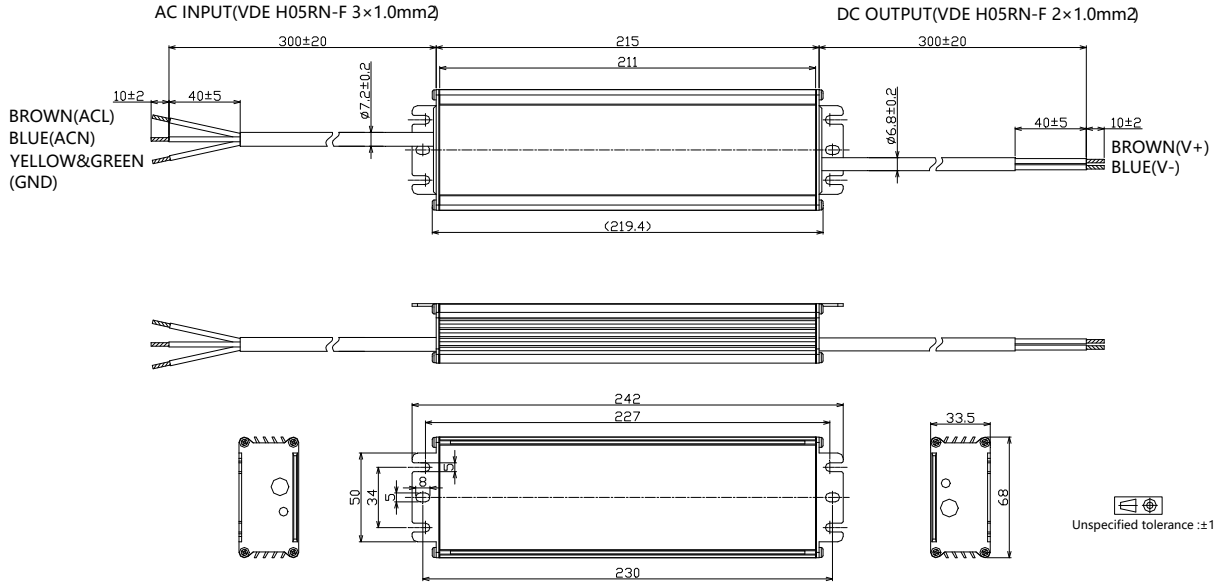

- BLD-240-Cxxx-DN/DRS (VDE Cable)

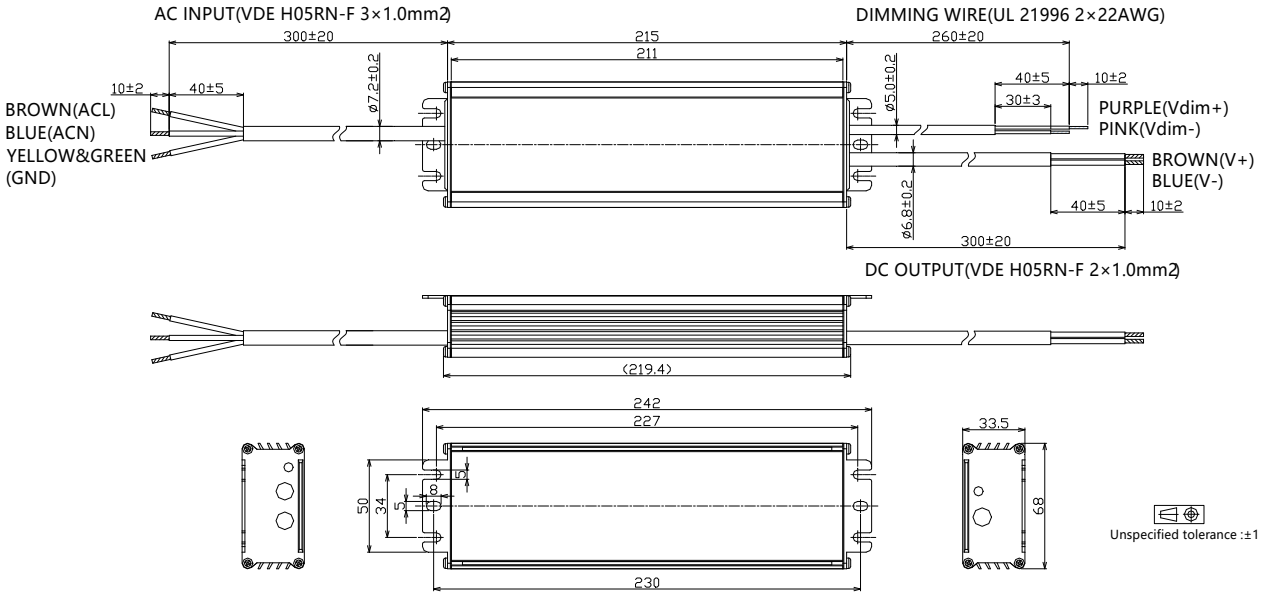

- BLD-240-Cxxx-EN/ERS (VDE Cable)

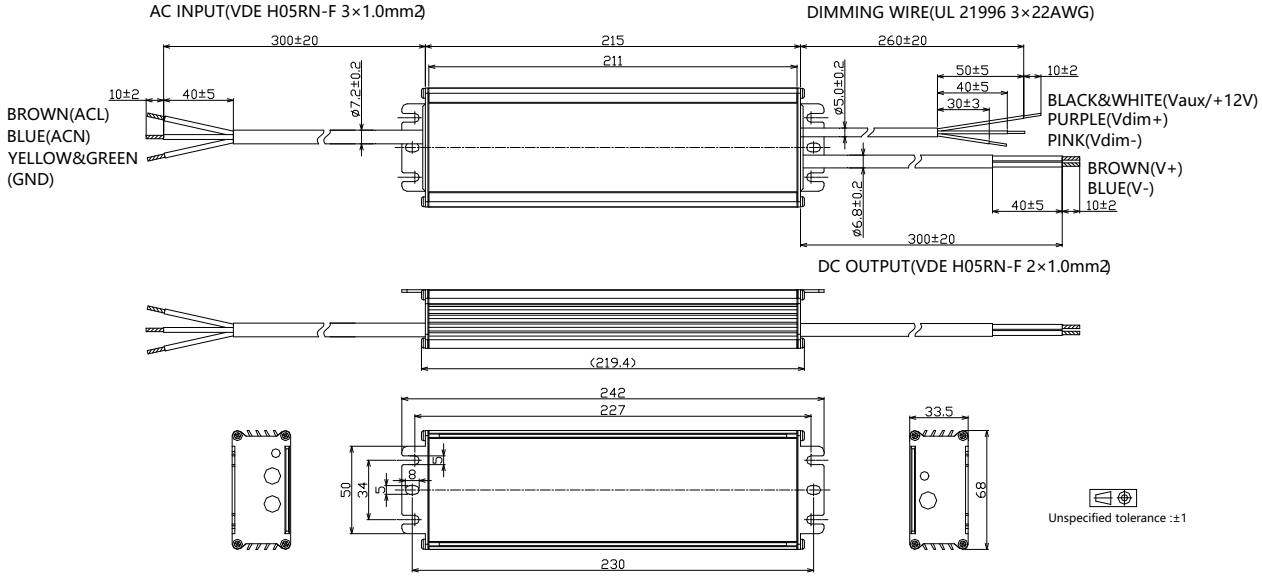

- **BLD-240-Cxxx-ARS (VDE Cable)**

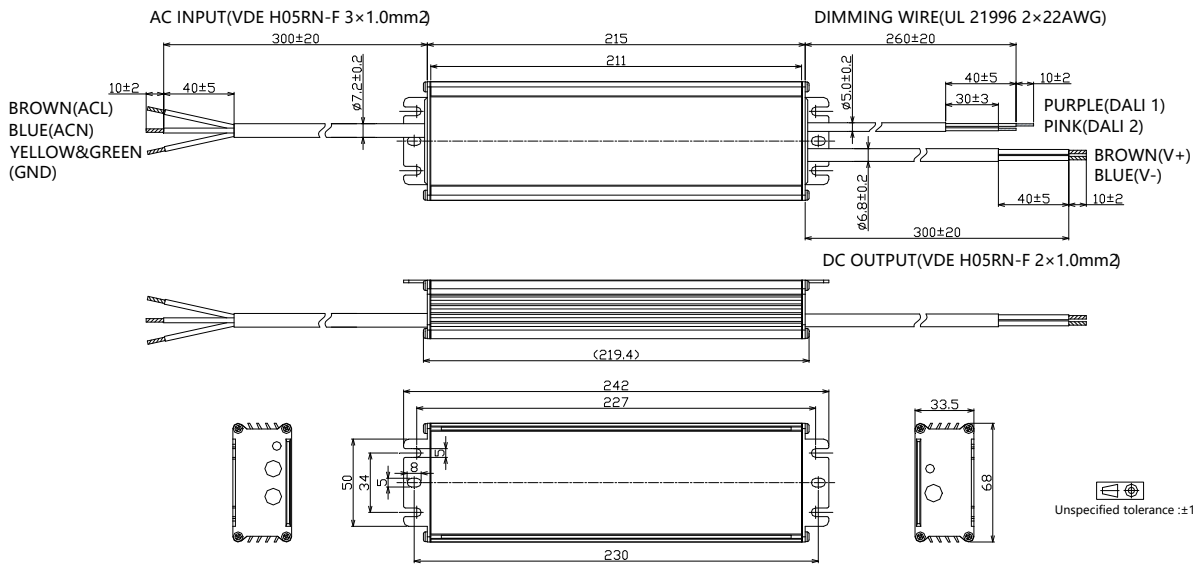

- **BLD-240-Cxxx-MRS (VDE Cable)**

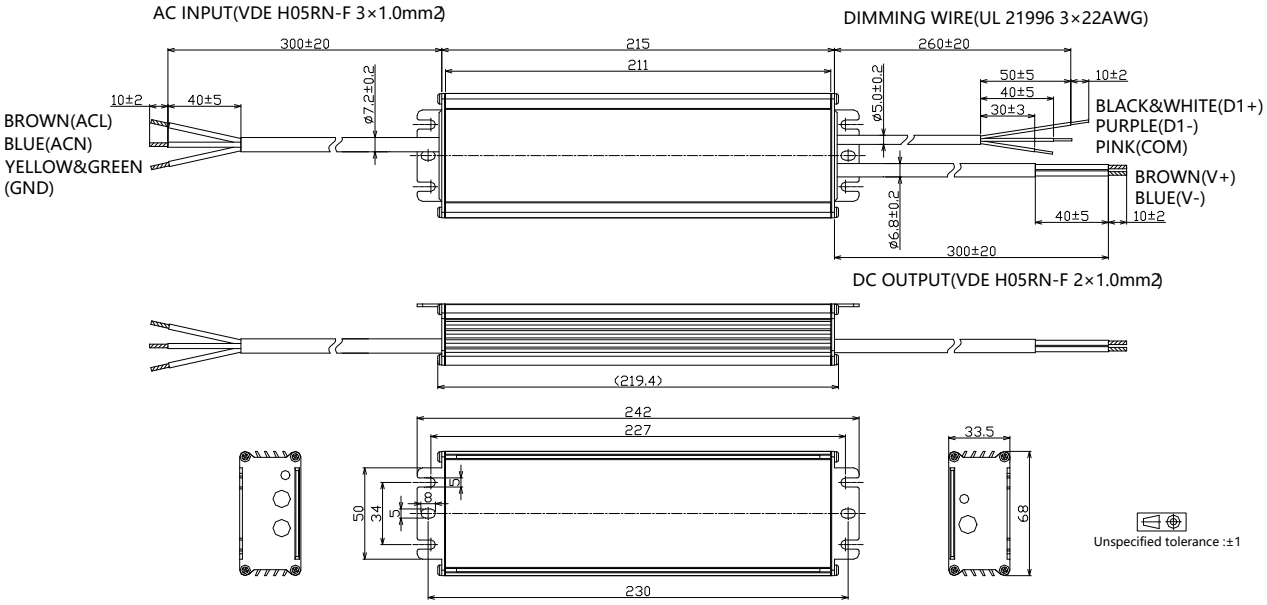

Output Operation Range

Model	Typical Set Output Current (mA)	Max Output Power (W)	Output Voltage Min (V)	Output Voltage Max(V)	Minimum Dimming Current (mA)
-C105	1050	250	143	238	105
	1000	250	150	250	100
	950	250	158	263	95
	900	250	167	278	90
	850	250	176	294	85
	800	250	188	313	80
	750	250	200	333	75
	700	250	214	357	70
	650	232	214	357	70
	600	214	214	357	70
	550	196	214	357	70
	500	179	214	357	70
	…	…	…	…	…
	70	25	214	357	70

Model	Typical Set Output Current (mA)	Max Output Power (W)	Output Voltage Min (V)	Output Voltage Max(V)	Minimum Dimming Current (mA)
-C140	1400	250	107	179	140
	1300	250	115	192	130
	1200	250	125	208	120
	1100	250	136	227	110
	1050	250	143	238	105
	1000	238	143	238	105
	950	226	143	238	105
	900	214	143	238	105
	850	202	143	238	105
	800	190	143	238	105
	750	179	143	238	105
	700	167	143	238	105
	…	…	…	…	…
	105	25	143	238	105

July 25, 2024, all rights reserved.

Model	Typical Set Output Current (mA)	Max Output Power (W)	Output Voltage Min (V)	Output Voltage Max(V)	Minimum Dimming Current (mA)
-C210	2100	250	71	119	210
	2000	250	75	125	200
	1900	250	79	132	190
	1800	250	83	139	180
	1700	250	88	147	170
	1600	250	94	156	160
	1500	250	100	167	150
	1400	250	107	179	140
	1300	232	107	179	140
	1200	214	107	179	140
	1100	196	107	179	140
	1000	179	107	179	140
	…	…	…	…	…
	140	25	107	179	140

Model	Typical Set Output Current (mA)	Max Output Power (W)	Output Voltage Min (V)	Output Voltage Max(V)	Minimum Dimming Current (mA)
-C280	2800	250	54	89	280
	2700	250	56	93	270
	2600	250	58	96	260
	2500	250	60	100	250
	2400	250	63	104	240
	2300	250	65	109	230
	2200	250	68	114	220
	2100	250	71	119	210
	2000	238	71	119	210
	1900	226	71	119	210
	1800	214	71	119	210
	1700	202	71	119	210
	…	…	…	…	…
	210	25	71	119	210

July 25, 2024, all rights reserved.

Model	Typical Set Output Current (mA)	Max Output Power (W)	Output Voltage Min (V)	Output Voltage Max(V)	Minimum Dimming Current (mA)
-C420	4200	250	36	60	420
	4000	250	38	63	400
	3900	250	38	64	390
	3800	250	39	66	380
	3700	250	41	68	370
	3600	250	42	69	360
	3500	250	43	71	350
	3400	250	44	74	340
	3300	250	45	76	330
	3200	250	47	78	320
	3100	250	48	81	310
	3000	250	50	83	300
	2900	250	52	86	290
	2800	250	54	89	280
	2700	241	54	89	280
	…	…	…	…	…
	280	25	54	89	280

Model	Typical Set Output Current (mA)	Max Output Power (W)	Output Voltage Min (V)	Output Voltage Max(V)	Minimum Dimming Current (mA)
-C690	6900	250	22	36	690
	6800	250	22	37	680
	6600	250	23	38	660
	6400	250	23	39	640
	6200	250	24	40	620
	6000	250	25	42	600
	5800	250	26	43	580
	5600	250	27	45	560
	5400	250	28	46	540
	5200	250	29	48	520
	5000	250	30	50	500
	4800	250	31	52	480
	4500	240	33	56	450
	4400	229	33	56	450
	…	…	…	…	…
	450	25	33	56	450

July 25, 2024, all rights reserved.

Revision History

Revision	Date	Contents
B	2022-03-22	1. Index page added 2. Reduced dimming interface sourcing current 3. DALI 2.0 compatibility added 4. Programming instruction added 5. Inrush current data added 6. Tc point position indication added 7. Dielectric strength level added 8. Packaging information added 9. Mechanical design change with dimming cable color 10. Revision history added
C	2023-07-14	1. Update cable selection table in Model List Section
D	2023-09-15	1. Update model selection table with -DN,-EN,DR models
E	2024-07-25	1. Fast dimming description added 2. Power factor, THD, efficiency curves updated by 10-100% load range 3. MCB usage and driver quantity section added 4. Inrush current data updated

July 25, 2024, all rights reserved.