## TITLE

# WIFI 6E+GNSS PCB CABLED BALANCED ANTENNA

## TABLE OF CONTENTS


1. SCOPE
2. PRODUCT DESCRIPTION
3. GENERAL SPECIFICATION
4. PRODUCT STRUCTURE INFORMATION
5. APPLICABLE DOCUMENTS
6. ANTENNA SPECIFICATION
7. MECHANICAL SPECIFICATION
8. ENVIRONMENTAL SPECIFICATION
9. PACKING
10. OTHER MOLEX ANTENNA PRODUCTS
11. CHANGE HISTORY


THIS DOCUMENT CONTAINS INFORMATION THAT IS PROPRIETARY TO MOLEX ELECTRONIC TECHNOLOGIES, LLC AND SHOULD NOT BE USED WITHOUT WRITTEN PERMISSION

# WIFI 6E+GNSS PCB CABLED BALANCED ANTENNA

## 1.0 SCOPE

This Product Specification covers the mechanical, electrical and environmental performances specification for WiFi 6E+GNSS PCB Cabled Balanced Antenna

## 2.0 PRODUCT DESCRIPTION

### 2.1 PRODUCT NAME AND SERIES NUMBER (S)

Product name: WiFi 6E+GNSS PCB Cabled Balanced Antenna
Series Number: 146220

### 2.2 DESCRIPTION

Series 146220 is a balanced, dipole-type, high efficiency antenna for 2.4/5/6 GHz applications, including WiFi 6E, Bluetooth, Zigbee and others. This balanced antenna with ground plane independent design offers various cable length options for ease of integration into various devices.

### 2.3 FEATURES

- 1561~1602MHz, 2400~2500MHz,5150~5850MHz, 5925~7125MHz, Linear polarization
- Ground plane independent, balanced dual band antenna
- Flex size 53.5 x 16.6 x 0.8mm (not contain solder area)
- Miniature RF connector (MHF & U.FL compatible)
- Cable OD1.13mm, 3 standard length options (50/100/200mm)
- Cable and connector can be customized



MOLEX ANTENNA 3D VIEW

THIS DOCUMENT CONTAINS INFORMATION THAT IS PROPRIETARY TO MOLEX ELECTRONIC TECHNOLOGIES, LLC AND SHOULD NOT BE USED WITHOUT WRITTEN PERMISSION

### 3.0 GENERAL SPECIFICATION

| | | | | | |
|---|---|---|---|---|---|
| **Product name** | WiFi 6E+GNSS PCB Cabled Balanced Antenna | | | | |
| **Part number** | 146220 Series | | | | |
| **Frequency** | 1561MHz-1602Hz | 2.4GHz-2.5GHz | 5.15GHz-5.85GHz | 3GHz-6GHz | 5.925GHz-7.125GHz |
| **Polarization** | Linear | | | | |
| **Operating with matching** | -40℃ to 85℃ | | | | |
| **Storage with matching** | -40℃ to 85℃ | | | | |
| **RF Power** | 2 Watts | | | | |
| **Impedance with matching** | 50 Ohms | | | | |
| **Antenna type** | PCB | | | | |
| **Connector type** | Miniature RF connector (MHF & U.FL compatible) | | | | |
| **Cable diameter** | Ø1.13mm | | | | |
| **Cable length** | 50 mm (P/N for 1462200050) | | | | |
| | 100 mm (P/N for 1462200100) | | | | |
| | 200 mm (P/N for 1462200200) | | | | |

THIS DOCUMENT CONTAINS INFORMATION THAT IS PROPRIETARY TO MOLEX ELECTRONIC TECHNOLOGIES, LLC AND SHOULD NOT BE USED WITHOUT WRITTEN PERMISSION

## 4.0 PRODUCT STRUCTURE INFORMATION

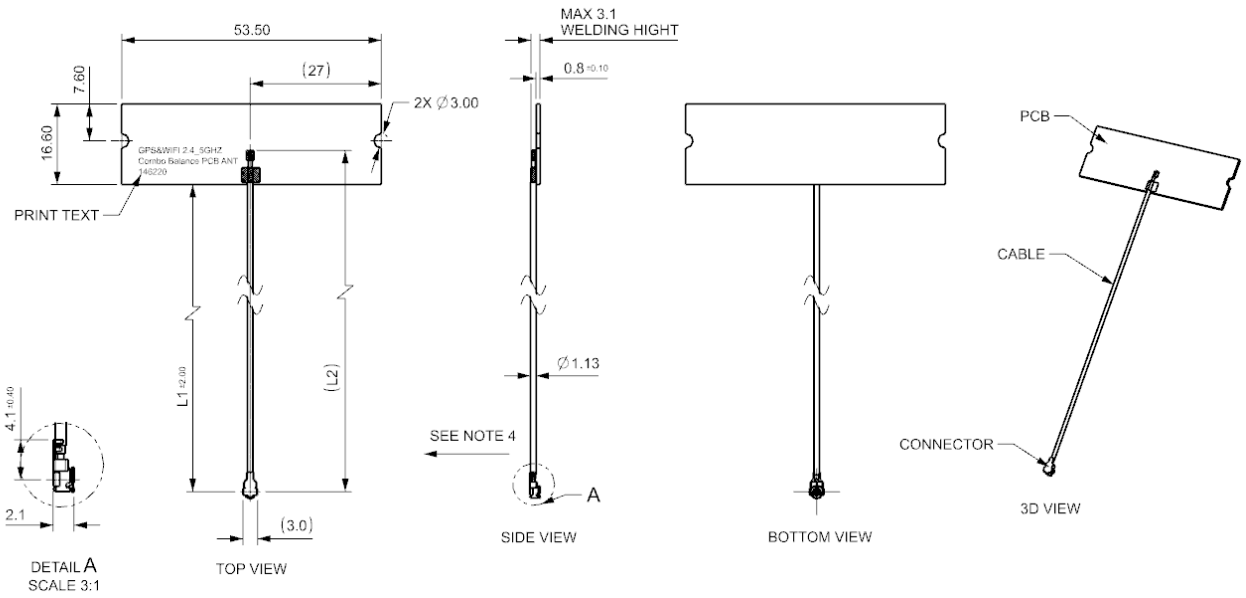


NOTE:
1.ANTENNA P/N SEE TABLE-A.
2.PCB COLOR:GREEN.
3.CONNECTOR:OD 1.13 RF 2.5H CONNECTOR GOLD PLATED.
4.CAN NOT LIFT UP CABLE IN VERTICAL DIRECTION.

TABLE-A

| ITEM | ANTENNA P/N | "L1"LEHTH | "L2" LENTH |
|---|---|---|---|
| 1 | 1462200050 | 43MM | 50MM |
| 2 | 1462200100 | 93MM | 100MM |
| 3 | 1462200200 | 193MM | 200MM |

Mechanical Structure Information for 146220 series

## 5.0 APPLICABLE DOCUMENTS

| DOCUMENT | NUMBER | DESCRIPTION |
|---|---|---|
| Sale Drawing (SD) | SD-1462200050 | Mechanical Dimension of the product |
| Application Guide (AS) | AS-1462200100 | Antenna Application and surrounding |
| Packing Drawing (PK) | PK-1462200100 | Product packaging specifications |

THIS DOCUMENT CONTAINS INFORMATION THAT IS PROPRIETARY TO MOLEX ELECTRONIC TECHNOLOGIES, LLC AND SHOULD NOT BE USED WITHOUT WRITTEN PERMISSION

## 6.0 ANTENNA SPECIFICATION

All measurements are done of the antenna mounted on a PC/ABS material block of 1.5 mm thickness with VNA Agilent E5071C and Over-The-Air (OTA) chamber. All measurements in this document are done with the part no.1462200100 for different cable length.

### 6.1 ELECTRICAL REQUIREMENT

| 6.1.1 ELECTRICAL REQUIREMENTS FOR CABLE LENGHTH 50mm | | | | | |
|---|---|---|---|---|---|
| P/N | 1462200050 | | | | |
| Frequency Range | 1561-1602MHz | 2.4-2.5GHz | 5.15-5.85GHz | 3-6GHz | 5.925-7.125GHz |
| Peak Gain (Max) | 2.6 dBi | 3.1 dBi | 4.1 dBi | 3.8 dBi | 4.3 dBi |
| Average Total efficiency | >84% | >82% | >88% | >82% | >75% |
| Return Loss | <-8dB | <-8dB | <-8dB | <-8dB | <-6dB |

| 6.1.2 ELECTRICAL REQUIREMENTS FOR CABLE LENGHTH 100mm | | | | | |
|---|---|---|---|---|---|
| P/N | 1462200100 | | | | |
| Frequency Range | 1561-1602MHz | 2.4-2.5GHz | 5.15-5.85GHz | 3-6GHz | 5.925-7.125GHz |
| Peak Gain (Max) | 2.4dBi | 2.9dBi | 3.8dBi | 3.5dBi | 4.0 dBi |
| Average Total efficiency | >82% | >80% | >83% | >78% | >70% |
| Return Loss | <-8dB | <-8dB | <-8dB | <-8dB | <-6dB |

THIS DOCUMENT CONTAINS INFORMATION THAT IS PROPRIETARY TO MOLEX ELECTRONIC TECHNOLOGIES, LLC AND SHOULD NOT BE USED WITHOUT WRITTEN PERMISSION

| 6.1.4 ELECTRICAL REQUIREMENTS FOR CABLE LENGHTH 200mm | | | | | |
|---|---|---|---|---|---|
| P/N | 1462200200 | | | | |
| Frequency Range | 1561-1602MHz | 2.4-2.5GHz | 5.15-5.85GHz | 3-6GHz | 5.925-7.125GHz |
| Peak Gain (Max) | 2.1 dBi | 2.6 dBi | 3.3 dBi | 3.0 dBi | 3.4 dBi |
| Average Total efficiency | >76% | >74% | >73% | >69% | >60% |
| Return Loss | <-8dB | <-8dB | <-8dB | <-8dB | <-6dB |

Note that the above antenna performance is measured with just the antenna mounted on a PC/ABS block to similar a free-space condition. When implement into the system, the frequency resonant might be off-tune due to the loading of surrounding components especially metal plane. This off-tune can be compensated through matching. Although module manufacturers specify a peak gain limit, it is based on free-space conditions. The peak gain will be degraded by 1 to 2dBi in the actual implementation as the radiation pattern will change due to the surround components. As such, during selection of antenna, you can select one with high peak gain to compensate for the loss. Molex can offer assistant to choose the best location and best tuning in-order to meet this peak gain requirement.

THIS DOCUMENT CONTAINS INFORMATION THAT IS PROPRIETARY TO MOLEX ELECTRONIC TECHNOLOGIES, LLC AND SHOULD NOT BE USED WITHOUT WRITTEN PERMISSION

### 6.2 CABLE LOSS

| DESCRIPTION | TEST CONDITION | REQUIREMENTS | | | |
|---|---|---|---|---|---|
| Frequency Range | 2 GHz~7.125GHz | 1.5GHz~3GHz | 3GHz~5GHz | 5GHz~6GHz | 6GHz-7.125GHz |
| Attenuation | 1m cable measured by VNA5071C | ⩽3dB/m | ⩽4dB/m | ⩽5.5dB/m | ⩽6.5dB/m |

Balance antenna resonance is insensitive to cable's length, but the cable's loss will affect the total efficiency.

## 7.0 MECHANICAL SPECIFICATION

All measurements in this document are done with the part no.1462200100 for different cable length.

| DESCRIPTION | TEST CONDITION | TEST RESULT |
|---|---|---|
| Pull Test | 1. Test machine: Max intelligent load tester<br>2. Stick the flex antenna on a plastic board, pull cable in axial direction. | Pull force >8N |
| Un-mating force (connector) | Solder the receptacle connector to the test board ,then place the board and plug on push-on/pull-off machine, and repeat mating and un-mating 30 cycles at a speed 25±3mm/min. along the mating axis. | Un-mating force : 0.5 kgf min |

THIS DOCUMENT CONTAINS INFORMATION THAT IS PROPRIETARY TO MOLEX ELECTRONIC TECHNOLOGIES, LLC AND SHOULD NOT BE USED WITHOUT WRITTEN PERMISSION

## 8.0 ENVIRONMENTAL SPECIFICATION

| DESCRIPTION | SPECIFICATION |
|---|---|
| Temperature /Humidity cycling | 1.The device under test is kept for 30 mins in an environment with a temperature of -40 ℃.<br>2. Kept for 4 Hours in an environment with a temperature of 85 ℃.<br>3. Kept for 2 Hours in an environment with a temperature of 125 ℃.<br>4. The cycle is repeated until a total of 40 cycles have been completed. Hereafter the conditions are stabilized at room temperature. Transfer temperature 8℃ per min.<br>5. Parts should meet RF spec before and after test.<br>6. No cosmetic problem (No soldering problem; No adhesion problem of glue.) |
| Temperature Shock | 1.The device under test at -40 ℃-125 ℃ by 100 cycles, Dwell of 30 mins, transition time between Dwell 30 secs (~ 61 mins / cycle) and each item should be measured after exposing them in normal temperature and humidity for 24 h.<br>2. Parts should meet RF spec before and after test.<br>3. No cosmetic problem（No soldering problem；No adhesion problem of glue）. |
| High Temperature | 1.Temperature:125℃, time:1008 hours<br>2.There is no substantial obstruction to air flow across and around the samples, and the samples are not touching each other<br>3. Parts should meet RF spec before and after test.<br>4. No cosmetic problem（No soldering problem；No adhesion problem of glue）. |
| Salt mist test | 1. The device under test is exposed to a spray of a 5% (by volume) resolution of NACL in water for 2 hours. Thereafter the device under test is left for 1 week in room temperature at a relative humidity of 95%. The cycle is repeated until a total of 2 cycles have been completed. Here after the conditions are stabilized at room temperature.<br>2. Parts should meet RF spec before and after test.<br>3. No visible corrosion. Discoloration accept. |

THIS DOCUMENT CONTAINS INFORMATION THAT IS PROPRIETARY TO MOLEX ELECTRONIC TECHNOLOGIES, LLC AND SHOULD NOT BE USED WITHOUT WRITTEN PERMISSION

## 9.0 PACKING

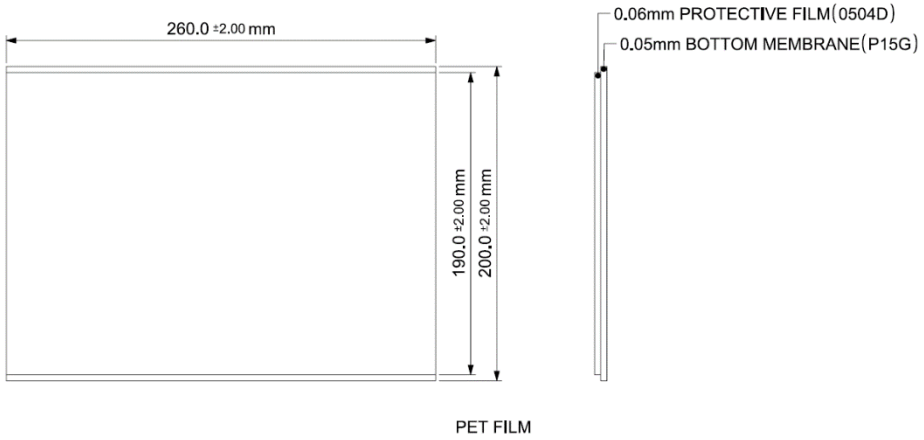


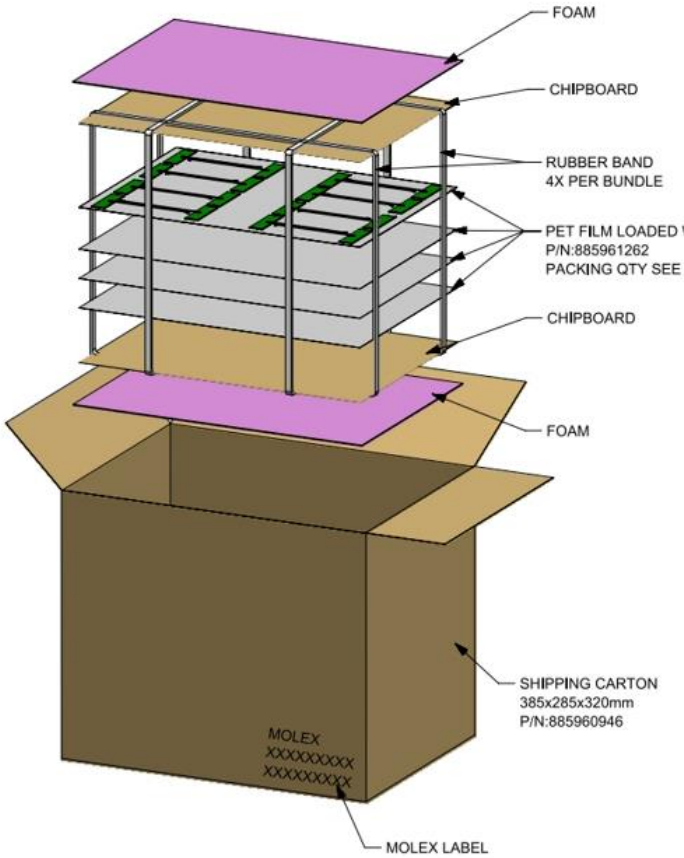


NOTE:
1.PRODUCTS MUST BE PACKED IN CARTONS AND SEALED UP WITH TAPE.
2.STICK LABEL WITH PART NUMBER AND DATE CODE.
3.STANDARD PACKAGING QUANTITY:SEE TABLE.
4.THIS PACKAGING SPECIFICATION TO BE USED FOR "GPS/WIFI 2.4/5GHz BACANCE PCB ANTENNA."

| PART NUMBER | PCS/FILM | FILMS/BUNDLE | BUNDLES/CARTON | QTY/CARTON |
|---|---|---|---|---|
| 1462200050 | 24 | 30 | 4 | 2880 |
| 1462200100 | 16 | 30 | 4 | 1920 |
| 1462200200 | 10 | 30 | 5 | 1500 |

PACKAGING INFORMATION FOR 146220 Series

THIS DOCUMENT CONTAINS INFORMATION THAT IS PROPRIETARY TO MOLEX ELECTRONIC TECHNOLOGIES, LLC AND SHOULD NOT BE USED WITHOUT WRITTEN PERMISSION

## 10.0 OTHER MOLEX ANTENNA PRODUCTS

Please refer to the Antenna products in Molex home page to view all the Molex Antenna products.
https://www.molex.com
Molex, LLC
2222 Wellington Court
Lisle, IL 60532
USA

## 11.0 CHANGE HISTORY

| CHANGE HISTORY | | |
|---|---|---|
| REV | DATA | DESCRIPTION |
| D | 2020/07/15 | Add 6-7.125GHz Frequency Range |
| E | 2020/08/31 | Optimized Part 6.1 Peak Gain & Efficiency |
| F | 2022/10/31 | Update the efficiency and gain values of Part 6.1 to be consistent with AS. |
| G | 2023/01/18 | Removed obsoleted part number. |
| H | 2023/04/17 | 1. Update 4.0 product structure information<br>2. Add 10.0 other molex antenna products |

THIS DOCUMENT CONTAINS INFORMATION THAT IS PROPRIETARY TO MOLEX ELECTRONIC TECHNOLOGIES, LLC AND SHOULD NOT BE USED WITHOUT WRITTEN PERMISSION