# Product Datasheet

The global certified BLD-200-C is a dual stage high efficiency smart LED driver. 10kV surge protection level, 100khour long life and 7-year warranty provide high confidence to luminaire users. It supports not only traditional 4-in-1 control, but also DALI2.0 and other smart protocols. NFC and cable programming are both available for users. All around protections including digital OTP (internal and external by NTC) with auto-recovery secure 24hour non-stop operation for luminaires.

☑ Street ☑ Flood ☑ Tunnel ☑ Shoe box ☑ Architectural


- Features ..... 2
- Model List ..... 2
- Technical Data ..... 3
- Safety/EMC Compliance ..... 4
- Dimming ..... 4
- Programming ..... 6
- Lifetime vs. Case Temperature ..... 8
- Power Factor vs. Load ..... 8
- THD vs. Load ..... 9
- Efficiency vs. Load ..... 9
- Inrush Current ..... 12
- Dielectric Strength ..... 12
- Tc Point ..... 13
- Packaging Information ..... 13
- Mechanical Design ..... 14
- Output Operation Range ..... 19
- Revision History ..... 22

## Features

- Supply Voltage: 90-305Vac or 127-420Vdc, 380Vac for 2 hours
- Great Surge Immunity 10kV
- **-60℃ Cold Ambient Startup**
- 100,000Hour Life @ Tc=75℃
- 7 Year Warranty @ Tc<=75℃
- Airset™ NFC Programmability
- +/-2% Output Current Accuracy (Programmable Model)
- Isolated 0-10V/PWM/Time/DALI2.0 (Optional) Dimmable
- Dim Off with 0.5W Standby Power
- 12V 300mA Auxiliary Power to Power Controllers and Fans (Optional)
- UL Class P, ENEC/CB/CCC SELV Output
- Global Certified Model Available
- Safety according to UL8750, EN 61347-1, 61347-2-13, 62384

## Model List

| Model Number | Input Voltage Range | Output Power | Output Voltage | Full Power Settable Current Min | Full Power Settable Current Max |
|---|---|---|---|---|---|
| BLD-200-C105-XYZ | 90 ~ 305 Vac | 200W | 114-286Vdc | 700mA | 1050mA |
| BLD-200-C140-XYZ | 90 ~ 305 Vac | 200W | 86-190Vdc | 1050mA | 1400mA |
| BLD-200-C210-XYZ | 90 ~ 305 Vac | 200W | 57-143Vdc | 1400mA | 2100mA |
| BLD-200-C420-XYZ | 90 ~ 305 Vac | 200W | 29-71Vdc | 2800mA | 4200mA |
| BLD-200-C630-XYZ | 90 ~ 305 Vac | 200 W | 19-45Vdc | 4400mA | 6300mA |

| XY= | Dimming Method | Programmable | 12Vaux | Dim-off |
|---|---|---|---|---|
| NN | - | - | - | - |
| DN | 0-10V/PWM/Time | Cable | - | No Dim-off as default status, programmed to have Dim-off |
| EN | 0-10V/PWM/Time | Cable | 300mA | √ |
| TR | Time/Set Current | NFC Wireless | - | - |
| DR | 0-10V/PWM/Time | NFC Wireless | - | No Dim-off as default status, programmed to have Dim-off |
| ER | 0-10V/PWM/Time | NFC Wireless | 300mA | √ |
| AR | DALI2.0 | NFC Wireless | - | √ |
| MR | DMX512 + RDM | NFC Wireless | - | √ |

| Z= | U | V | S | S-GLB000 | W | D |
|---|---|---|---|---|---|---|
| Input Cable | 3 pin UL cable with ground | 3 pin UL cable with ground | 3 pin VDE cable with ground | 3 pin Global cable with ground | 3 pin VDE cable with ground | 2 pin VDE cable without ground |
| Output Cable | 2 pin UL cable without ground | 3 pin UL cable with ground | 2 pin VDE cable without ground | 2 pin Global cable without ground | 3 pin VDE cable with ground | 2 pin VDE cable without ground |
| Certified Input Voltage Range | UL Listed Class P FCC 120-277Vac | UL Listed Class P FCC 120-277Vac | ENEC CB RCM Class I 220-277Vac | UL Recognized 120-277Vac ENEC CB RCM Class I 220-277Vac | Class I 120-277Vac | ENEC CB Class II 220-277Vac |

## Technical Data

| | |
|---|---|
| Input Voltage | 90～305Vac or 127V-420Vdc, 380Vac for 2 hours |
| Input Frequency | 47～63Hz |
| Power Factor | >0.9@60-100%load, refer to PF vs. Load curve |
| THD | <15%@60-100%load, refer to THD vs. Load curve |
| Input Current | 1.8Amax@120Vac & Full-Load,<br>0.9Amax@220Vac & Full-Load |
| Inrush Current | See Inrush Current Section in the datasheet |
| Leakage Current | 0.75MIU max @277Vac 60Hz, UL8750<br>0.7mA max @240Vac 50/60Hz, IEC60598-1 |
| Input Under Voltage | Shut down and auto-restart |
| Surge Protection | Line to line 6kV, line to ground 10kV, IEC 61000-4-5 |
| Current Accuracy | ±2%Io for programmable model, ±5%Io for non-programmable model |
| Ripple Current | Ip-p:5%Io max |
| Setup Time | 1.2s max |
| Overshoot | 10% Io max & LED Load |
| Output Over Voltage | 120% Vomax, typ. |
| Short Circuit | Auto recovery. The output recovers when short is removed. |
| Over Temperature | Lower the output current when Tc≧105±10℃; Auto Recovery When Tc≦70±10℃ |
| Auxiliary Power (Vaux) | 12V+/-5%, 300mA max |
| Operating Temperature | Case Temperature Tc=-60℃~+90℃； 10%RH～100%RH |
| Storage Temperature | -40℃～+85℃； 5%RH～100%RH |
| MTBF | ≥280,000 hours, 75℃ case temperature (MIL-HDBK-217F) |
| Lifetime | ≥100,000 hours, 75℃ case temperature, refer to life vs. Tc curve |
| Case Temperature | 90℃ max, marked in the Tc point of label |
| Dimensions | 6.85x2.67x1.52 by inch (body), 7.91x2.67x1.52 by inch (endcaps included) |
| | 175.0x68.0x38.5 by mm (body), 201.0x68.0x38.5 by mm (endcaps included) |
| Net Weight | 850g |
| Packing | See Package Information Section in the datasheet |

Notes: Unless specified, all the test results are measured in 25℃ room temperature.

## Safety/EMC Compliance

| Safety Standards | Description |
|---|---|
| UL8750 | Light emitting diode(LED) equipment for use in lighting products |
| UL1012/1310 | Power units other than class 2 / Class 2 power units |
| IEC 61347-1 | Lamp control gear Part 1: general and safety requirements |
| IEC 61347-2-13 | Lamp control gear Part 2-13: particular requirement for d.c. or a.c. supplied electronic control gear for LED modules |
| IEC 62384 | DC or AC supplied electronic control gear for LED modules - Performance requirements |
| IEC 55015/FCC Part 15 | Conducted emission test & radiated emission test; ANSI C63.4:2009 Class B |
| IEC 61000-3-2 | Harmonic current emissions; Class C |
| IEC 61000-3-3 | Voltage fluctuations & flicker |
| IEC 61000-4-2 | Electrostatic discharge (ESD): 8 kV air discharge, 4 kV contact discharge |
| IEC 61000-4-3 | Radio frequency electromagnetic field susceptibility test (RS) |
| IEC 61000-4-4 | Electrical fast transient (EFT) |
| IEC 61000-4-5 | Surge immunity test |
| IEC 61000-4-6 | Conducted radio frequency disturbances test (CS) |
| IEC 61000-4-8 | Power frequency magnetic field test |
| IEC 61000-4-11 | Voltage dips |
| IEC 61547 | Electromagnetic immunity requirements applies to lighting equipment |

## Dimming

| Parameter | Min. | Typ. | Max. |
|---|---|---|---|
| Vdim Sourcing Current | 100uA | 150uA | 200uA |
| Vdim Allowed Input Voltage | -20 V | | 20 V |
| 0-10V Dimming Range | 10% (Vdim=1V) | Linear | 100% (Vdim=9~10V) |
| PWM Dimming Range | 10% (Duty=10%) | Linear | 100% (Duty=90-100%) |
| Default Dim off Threshold | 0.4V or 4% | 0.5V or 5% | 0.6V or 6% |
| Default Dim off Threshold | 0.6V or 6% | 0.7V or 7% | 0.8V or 8% |
| PWM High | 3.8V | | 9V |
| PWM Low | 0V | | 0.6V |
| PWM Frequency | 300Hz | | 2kHz |
| DALI Interface Standard | | IEC62386, part 101,102,207 | |
| DA1,DA2 High Level | 9.5 | 16 | 22.5 |
| DA1,DA2 Low Level | -6.5 | 0 | 6.5 |
| DA1,DA2 Current | 0 | | 2mA |
| DMX+ & DMX- Voltage | -6V | | 6V |
| DMX to Ground Resistance | 25Mohm | | |
| Logic 0/1 (DMX+ to DMX-) Threshold | | 0.2V | |
| Communication Baud Rate | | 250kbps | |
| Fast Dimming[1] On-Off Transition | | 300ms | |
| Fast Dimming 10-100% Io Transition | | 70ms | |

Notes [1]: Fast dimming feature is only available by models with -FD0000 suffix.

- **Default Dimming Curves**

**a. 0-10V dimming without dim-off**

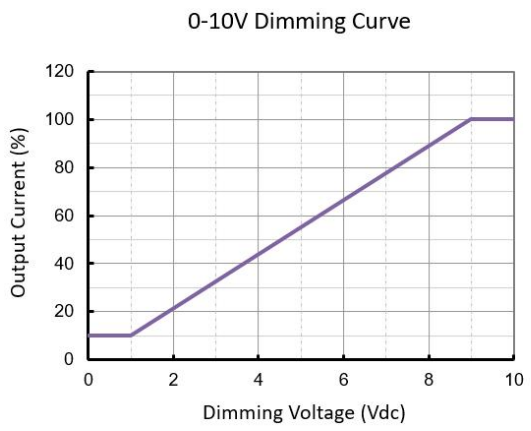


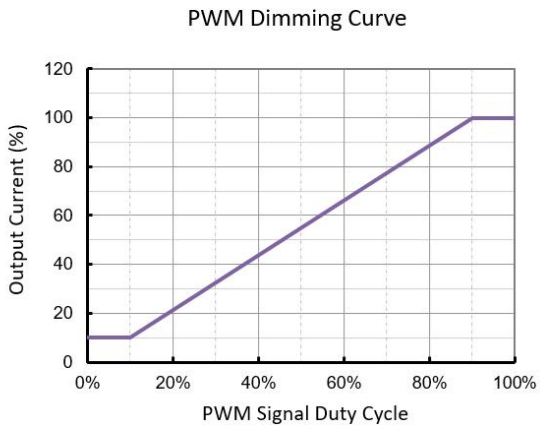


**b. 0-10V dimming with dim-off**

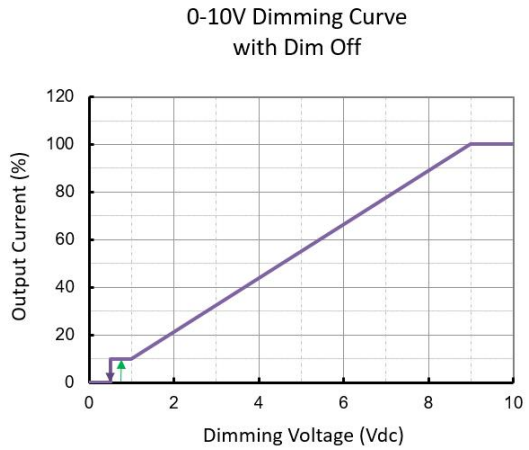


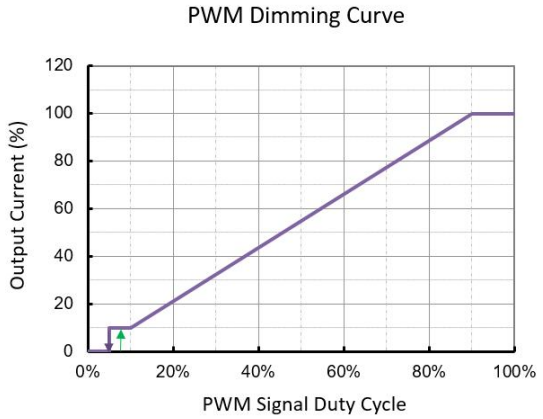


**c. DALI and DMX dimming curves**

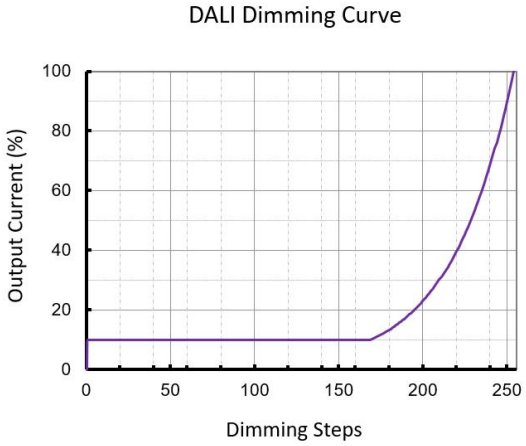


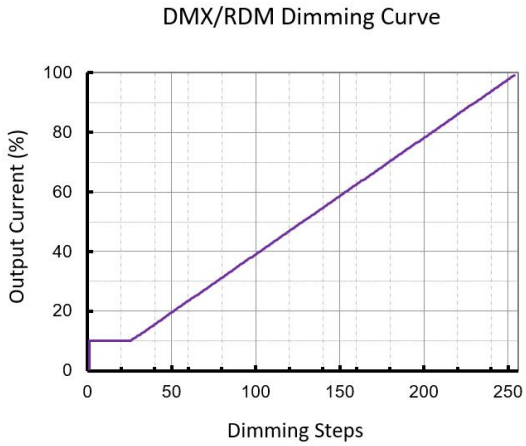


Note: Both DALI and DMX dimming curves can be customized to be linear or logarithmic as default.

## Programming

- **Programmable Functions**

uPowerTek LED drivers offer a range of configurable functions to meet specific lighting requirements. The Output Current, Dimming Mode, Dim Off/On Voltage Threshold, and Timer Dimming can be set as basic programming functions. Constant Lumen Output (CLO) can also be customized to ensure consistent light performance. Additionally, depending on the different product model numbers, users can benefit from programming Thermal Protection by external NTC (with extra cable), DALI/D4i Features, and DMX addressing.

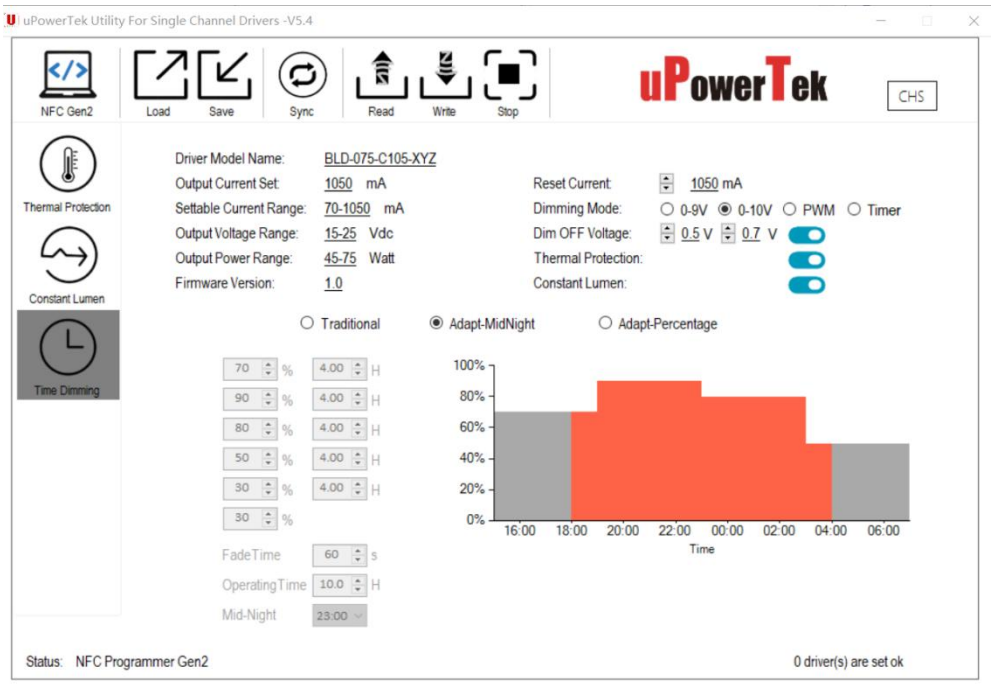


uPowerTek Programming Software Interface

- **Required Equipment**

To program uPowerTek LED drivers, users will need specific equipment based on their preferred method. For wired programming, the uPowerTek Cable Programmer is essential. For NFC wireless programming, users can use a smartphone with either IOS or Android, the uPowerTek NFC Programmer, or the FEIG NFC Programmers. These tools ensure a seamless and efficient setup process, realizing precise customization of the LED driver settings.

Cable Programmer

NFC Programmer V1

NFC Programmer V2

FEIG NFC Programmer

Android or iPhone

- **Connection Guide**

  This guide provides simple connection diagrams to help users understand the programming system. For more detailed operating instructions, including step-by-step procedures and additional configurations, please visit our website. You can download the comprehensive user manual and necessary software from the following link: https://www.upowertek.com/download-2/.

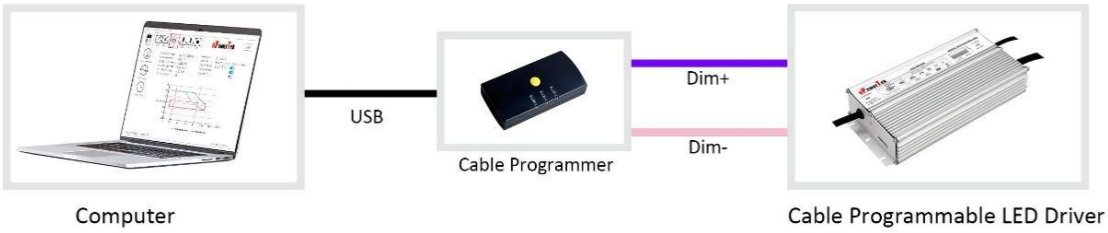


Wired Programming

Wireless Programming

Cellphone Programming

## Lifetime vs. Case Temperature

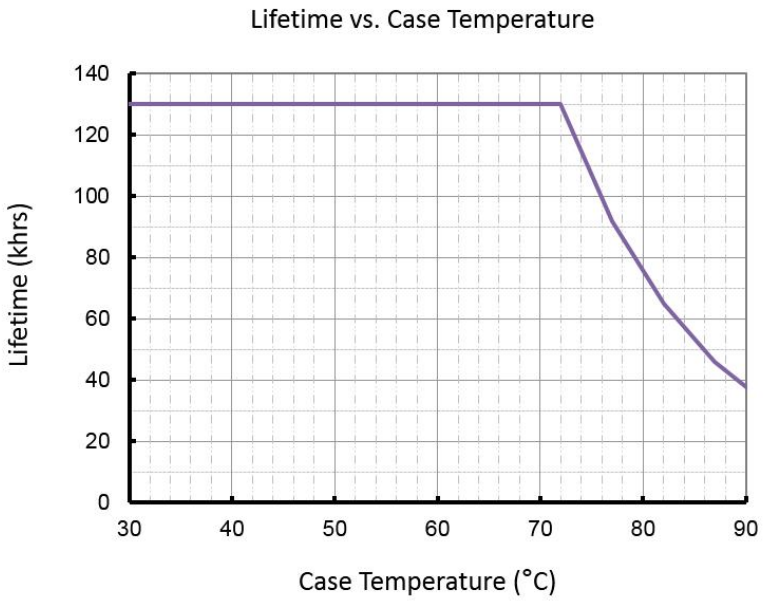


(End of Life: Maximum Failure Rate=10%)

## Power Factor vs. Load

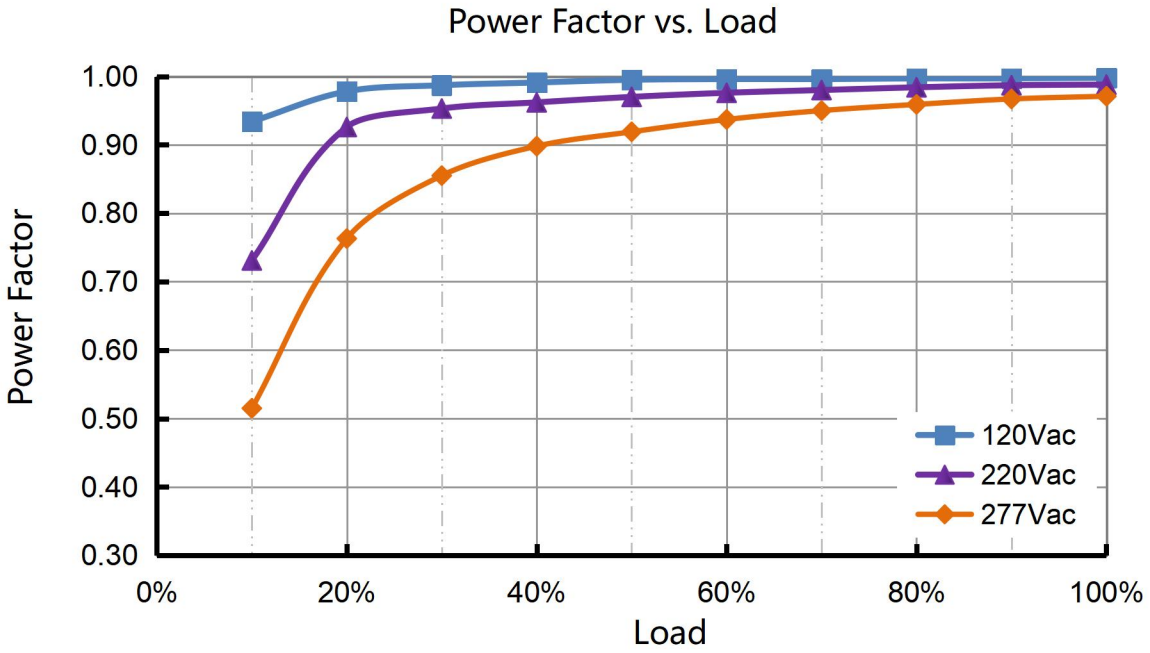

## THD vs. Load

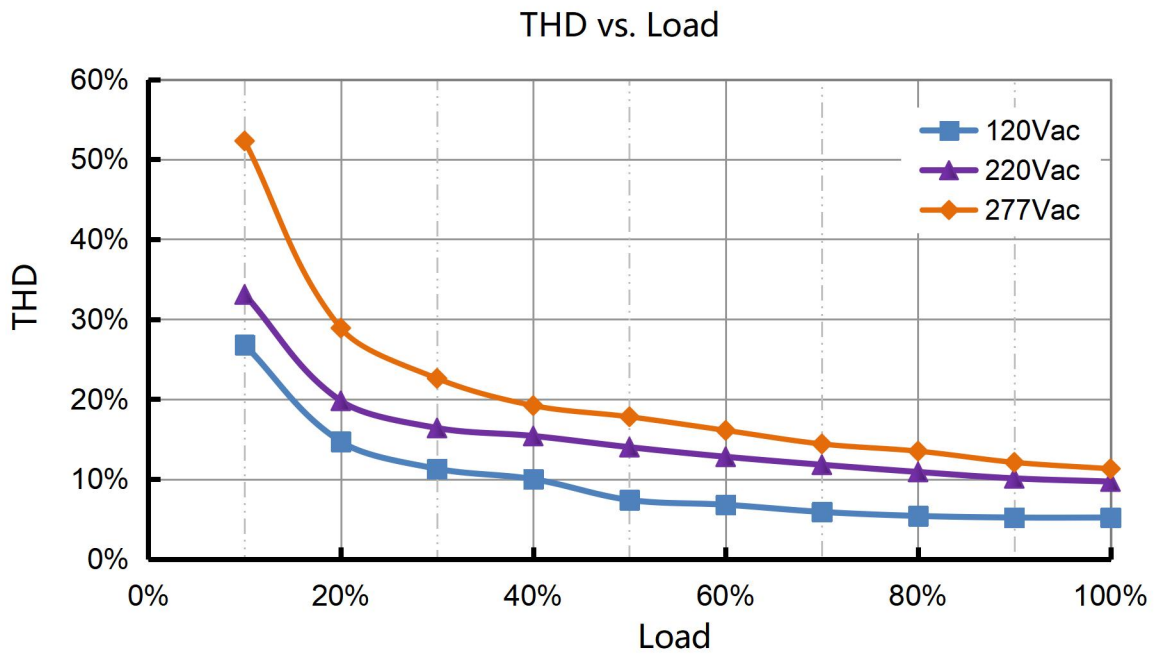


## Efficiency vs. Load

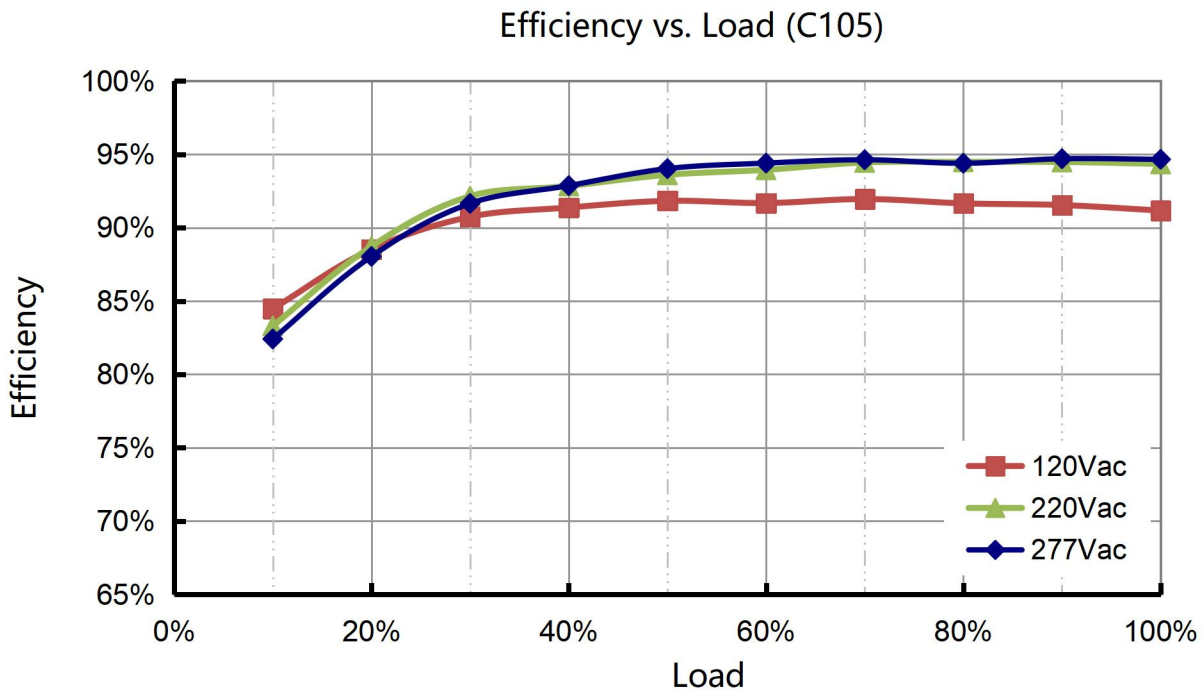

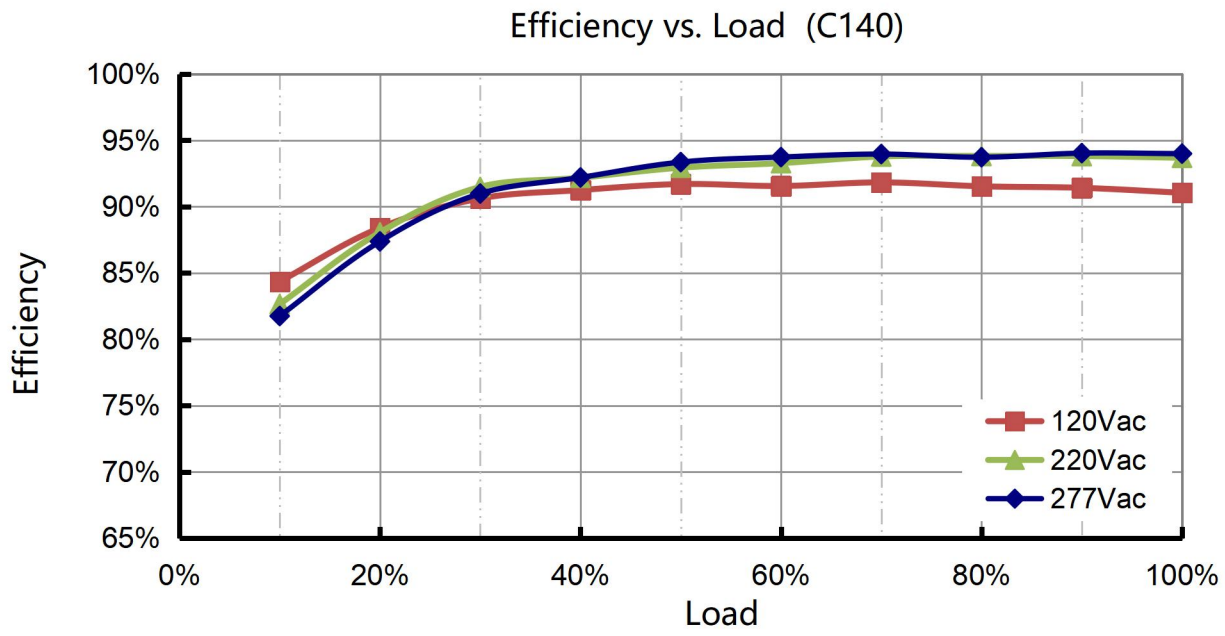
Efficiency vs. Load (C140)
100%
95%
90%
85%
80%
75%
70%
65%
Efficiency
0%
20%
40%
60%
80%
100%
Load
120Vac
220Vac
277Vac

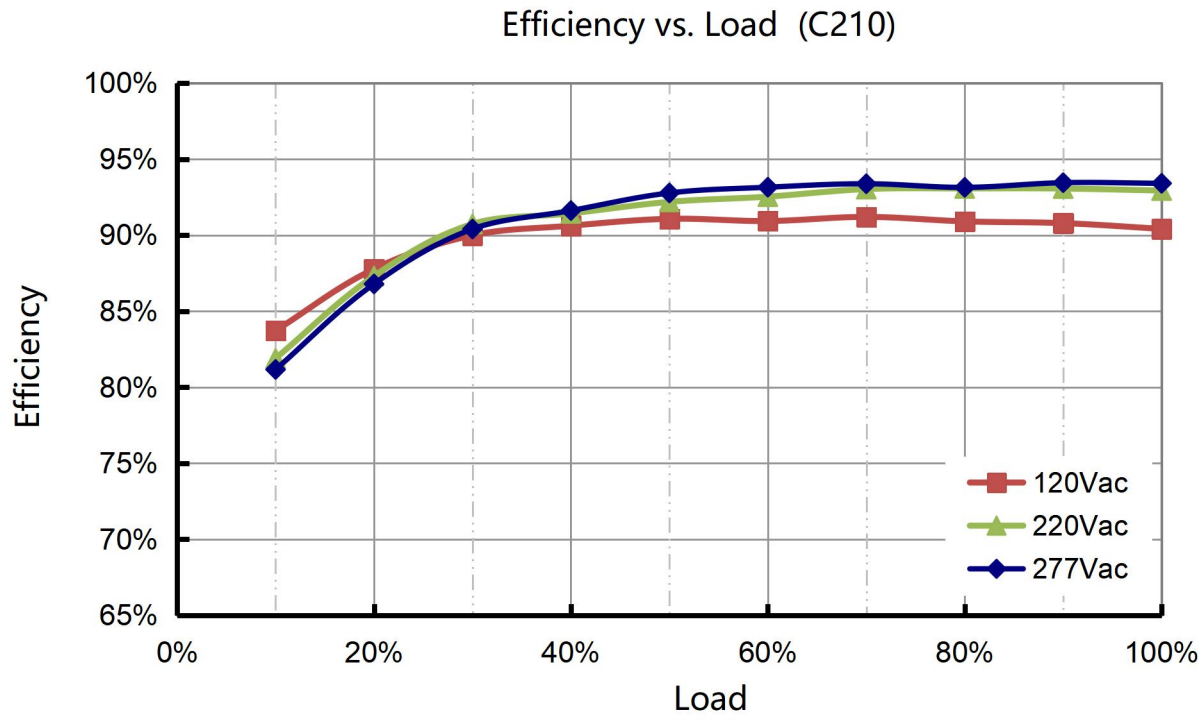
Efficiency vs. Load (C210)
100%
95%
90%
85%
80%
75%
70%
65%
Efficiency
0%
20%
40%
60%
80%
100%
Load
120Vac
220Vac
277Vac

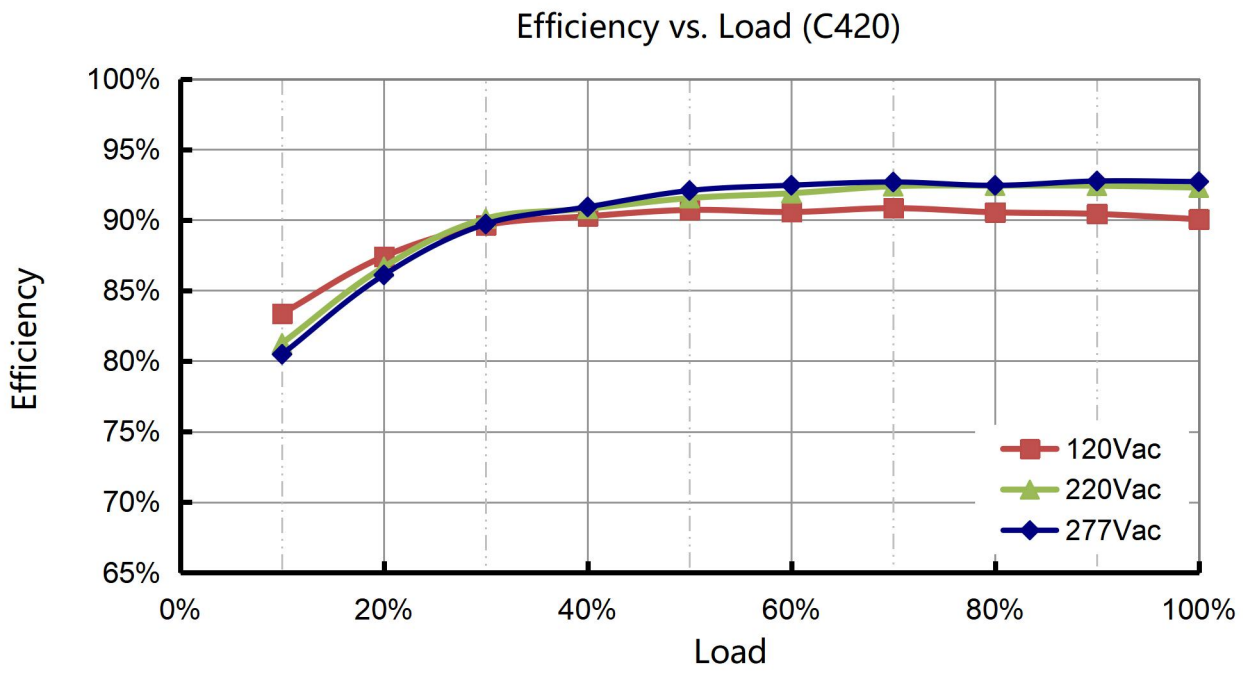
Efficiency vs. Load (C420)
100%
95%
90%
85%
80%
75%
70%
65%
Efficiency
0%
20%
40%
60%
80%
100%
Load
120Vac
220Vac
277Vac

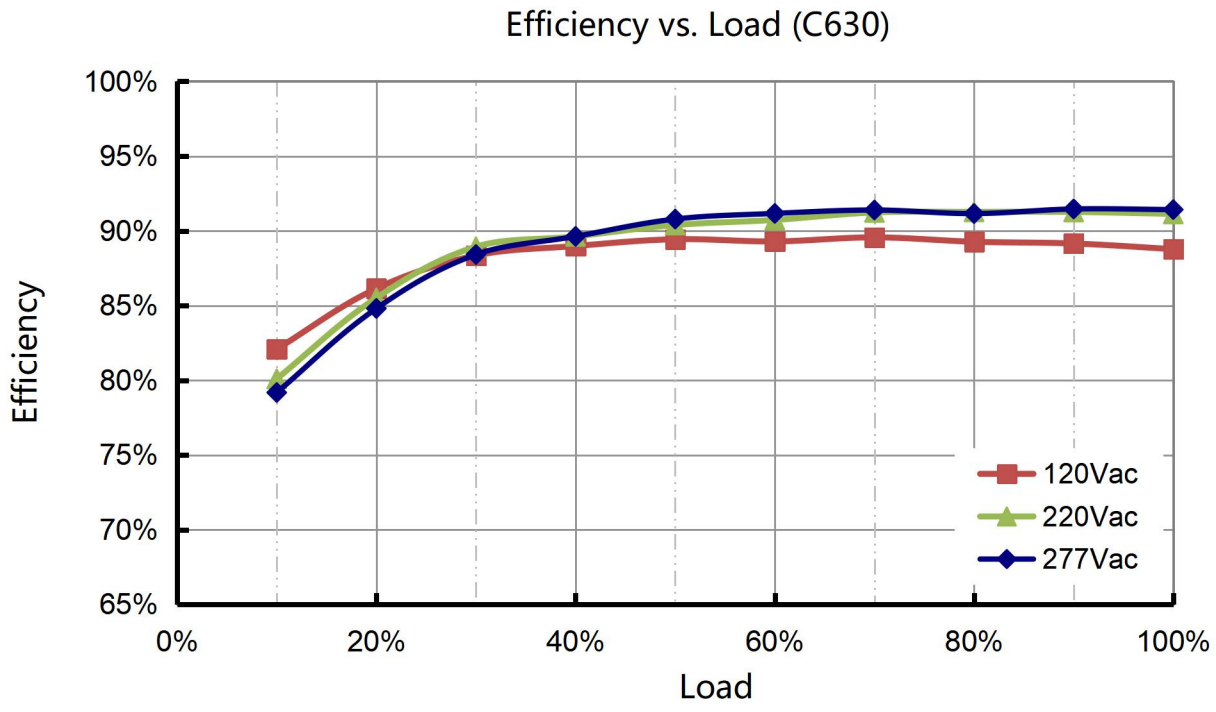
Efficiency vs. Load (C630)
100%
95%
90%
85%
80%
75%
70%
65%
Efficiency
0%
20%
40%
60%
80%
100%
Load
120Vac
220Vac
277Vac

## Inrush Current

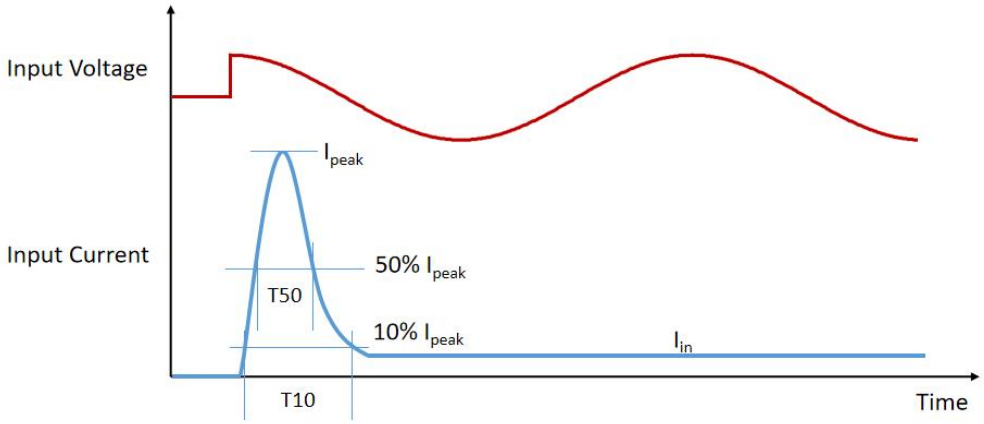


| Input Voltage | $I_{peak}$ | 10% -10% T10 Duration | 50% -50% T50 Duration |
|---|---|---|---|
| 120Vac | 33.0A | 920µs | 410µs |
| 220Vac | 63.2A | 760µs | 300µs |
| 277Vac | 82.8A | 700µs | 276µs |

**- MCB Suggestion**

| Type | B10 | B16 | B25 | B32 | C10 | C16 | C25 | C32 | D10 | D16 | D25 | D32 |
|---|---|---|---|---|---|---|---|---|---|---|---|---|
| Driver Quantity | 4 | 6 | 10 | 13 | 6 | 11 | 17 | 22 | 8 | 12 | 20 | 25 |

Note: Calculated with MCB S200 series manufactured by ABB at 230Vac Input condition

## Dielectric Strength

| Unit: Vac | Input | Output | Dimming | Case |
|---|---|---|---|---|
| Input | - | 3750 | 3750 | 1554 |
| Output | 3750 | - | 1554 | 1554 |
| Dimming | 3750 | 1554 | - | 1554 |
| Case | 1554 | 1554 | 1554 | - |

## Tc Point

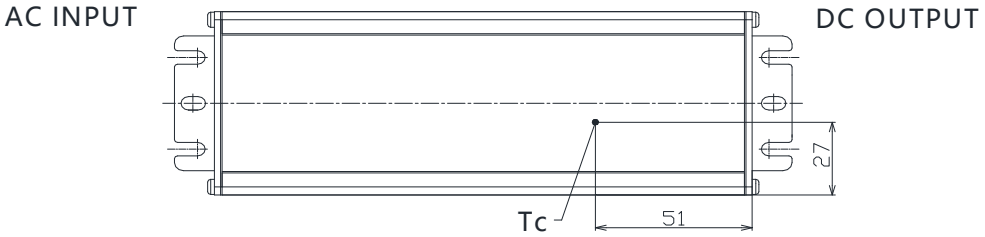


## Packaging Information

| | |
|---|---|
| Typical Carton Dimension(L×W×H) | 490×370×160 mm |
| Positioning plate | 3pcs/carton |
| Shield Board | 1pcs/carton |
| LED Drivers/LED | 12pcs/carton |
| Net Weight | 10.8 kg/carton |
| Gross Weight | 12.1 kg/carton |

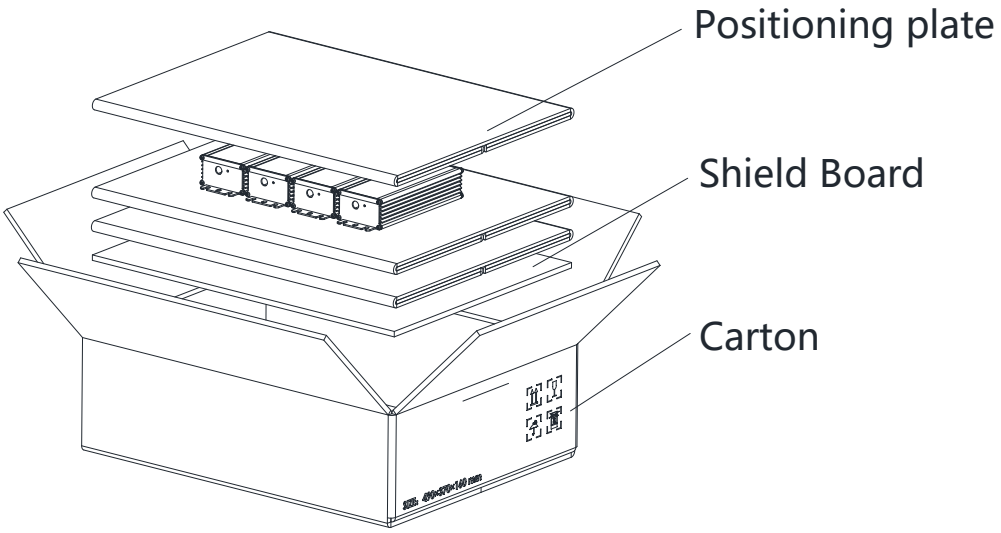

## Mechanical Design

- **BLD-200-Cxxx-NN/TRU (UL Cable)**

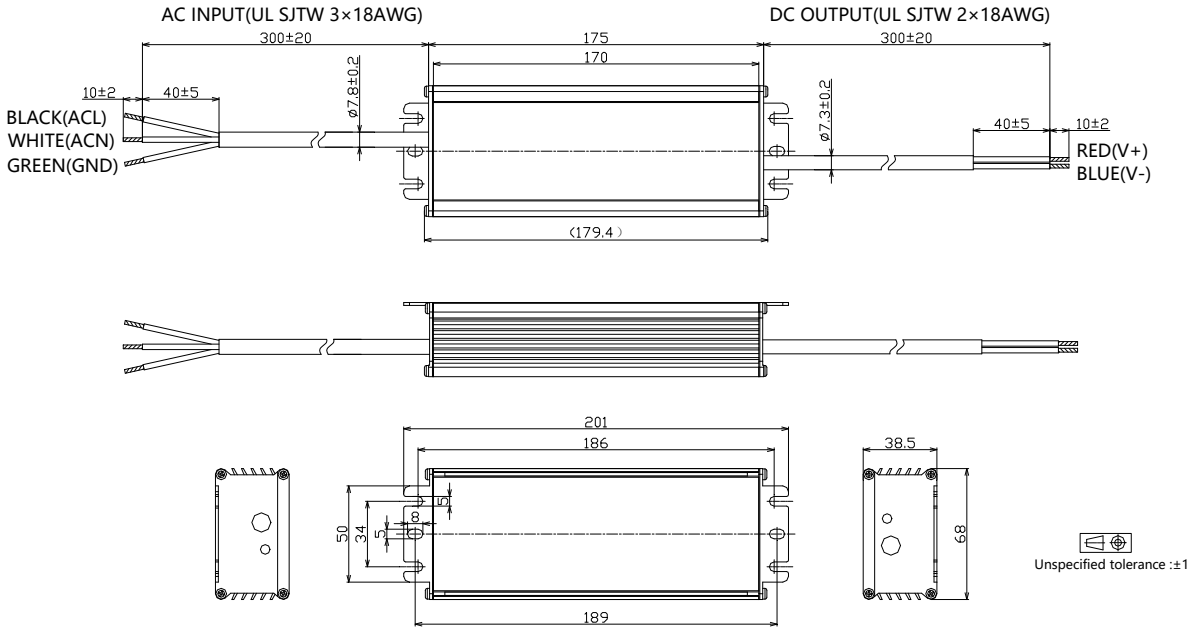


- **BLD-200-Cxxx-DN/DRU (UL Cable)**

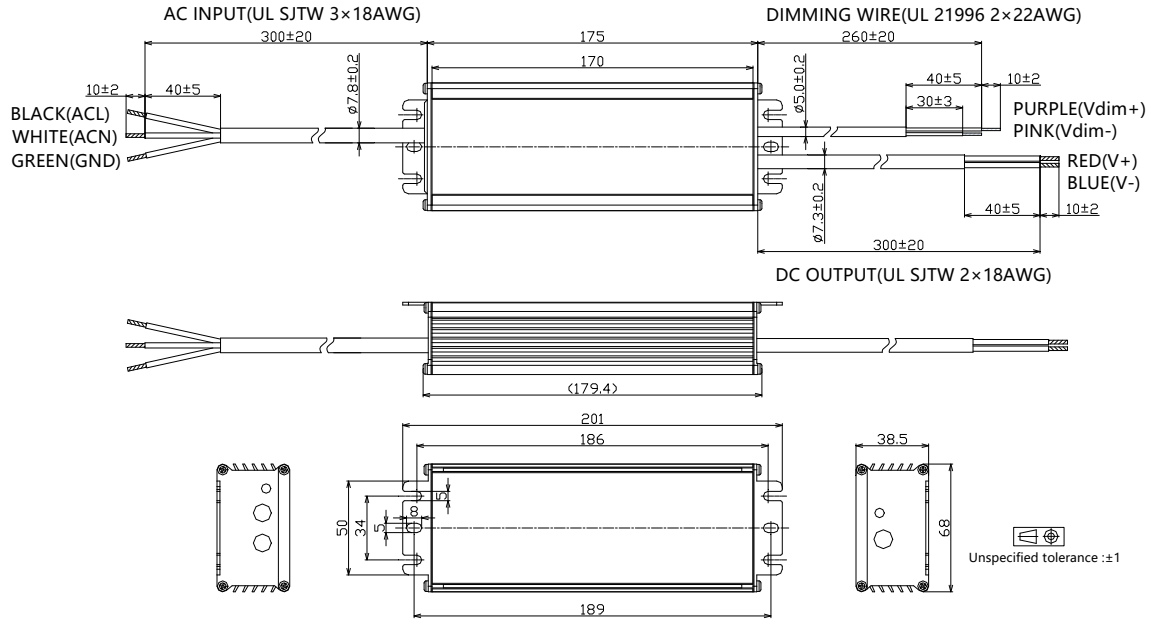

- **BLD-200-Cxxx-ERU (UL Cable)**

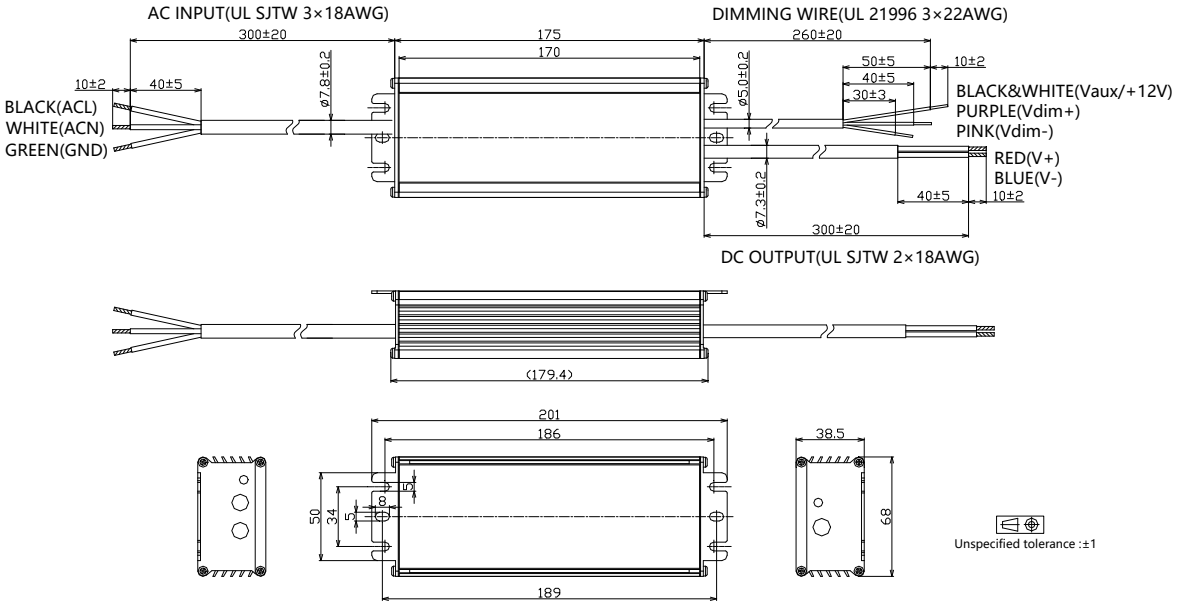


- **BLD-200-Cxxx-ARU (UL Cable)**

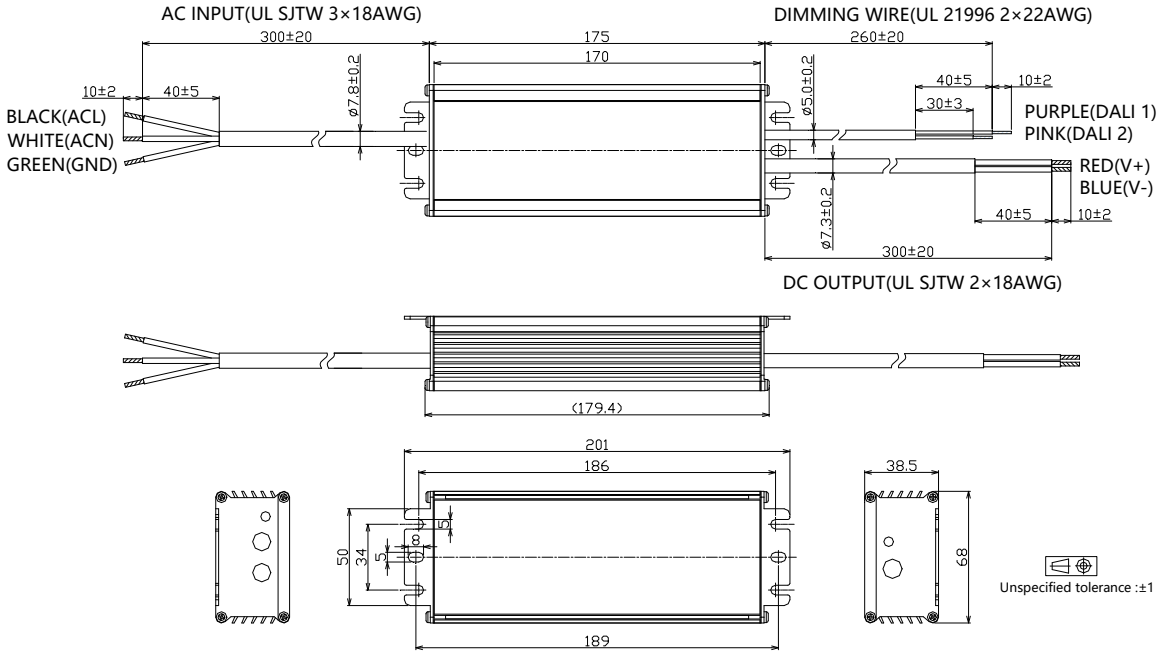

- **BLD-200-Cxxx-MRU (UL Cable)**

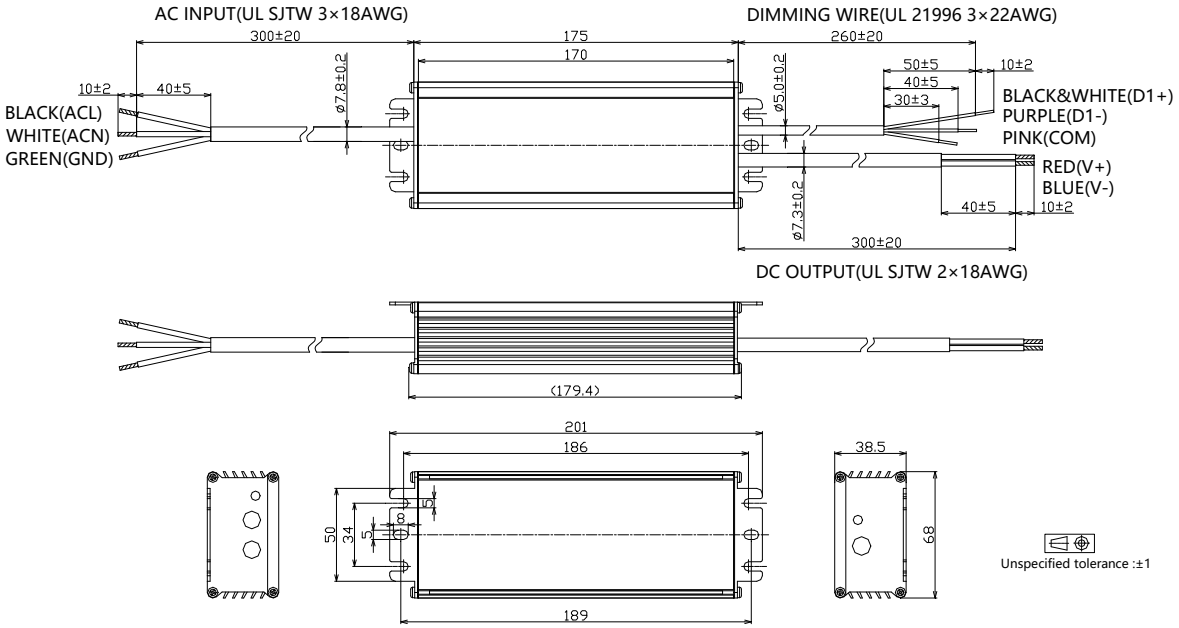


- **BLD-200-Cxxx-NN/TRS (VDE Cable)**

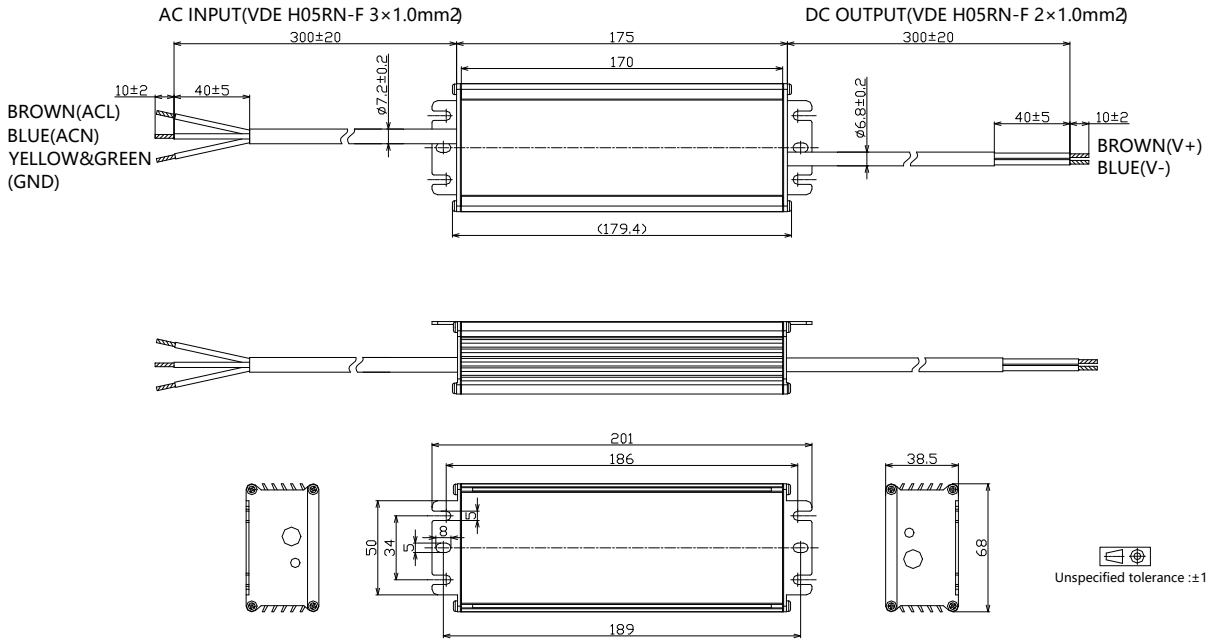

- **BLD-200-Cxxx-DN/DRS (VDE Cable)**

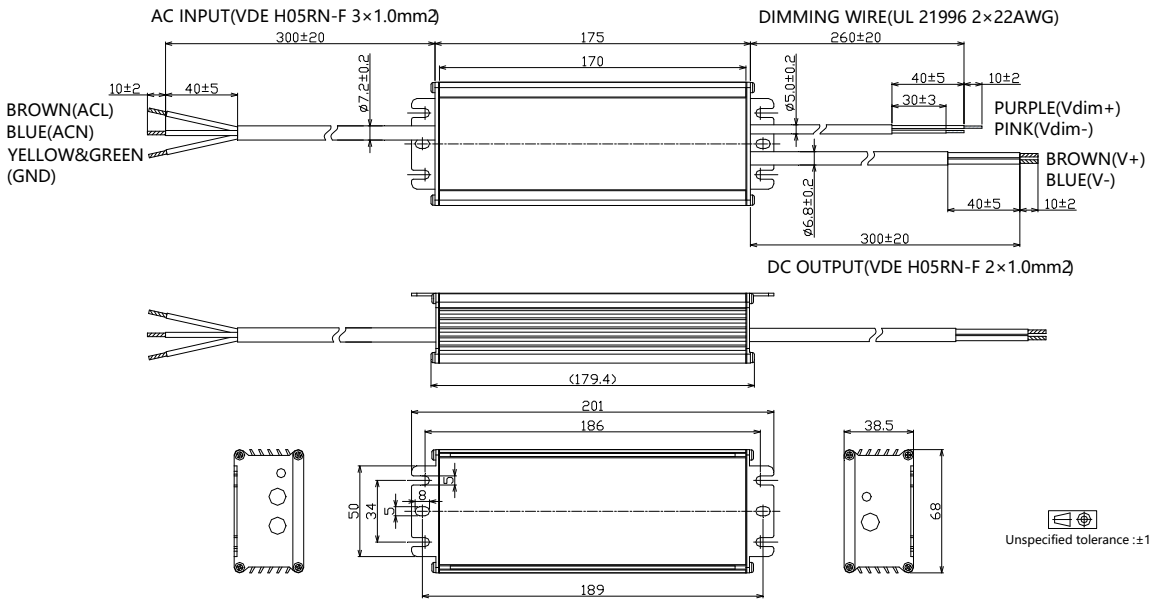


- **BLD-200-Cxxx-EN/ERS (VDE Cable)**

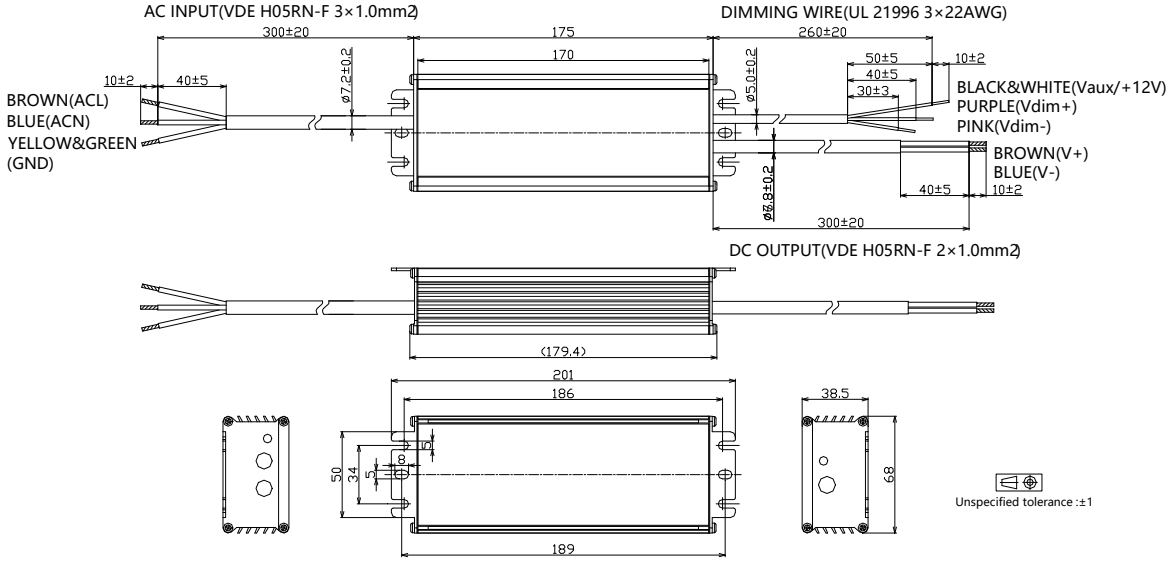

- **BLD-200-Cxxx-ARS (VDE Cable)**

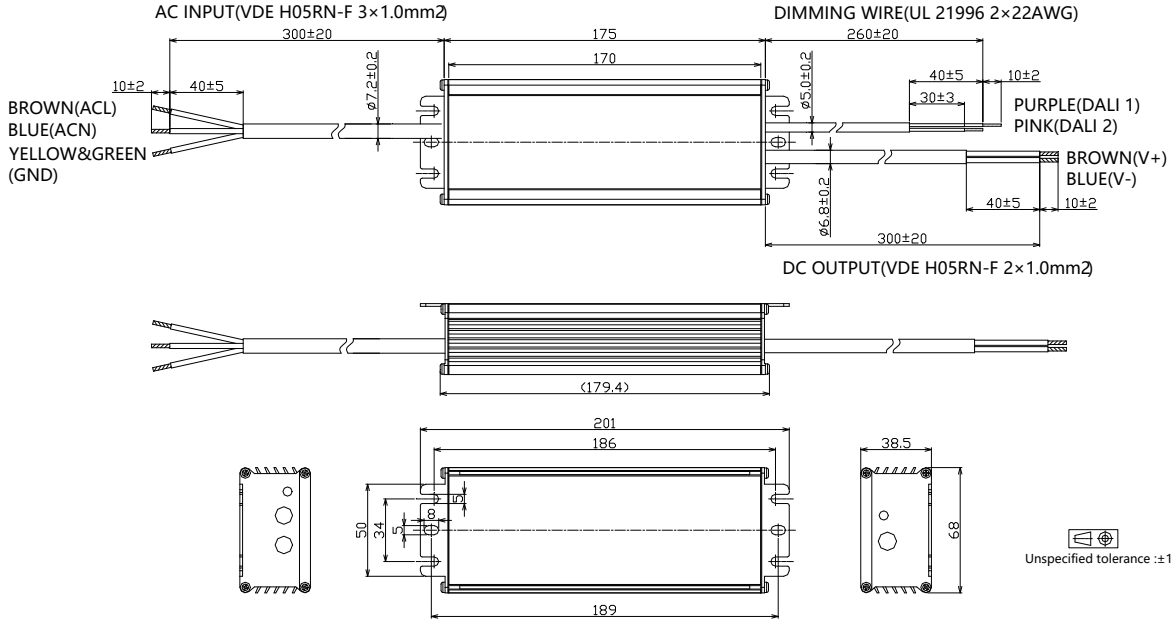


- **BLD-200-Cxxx-MRS (VDE Cable)**

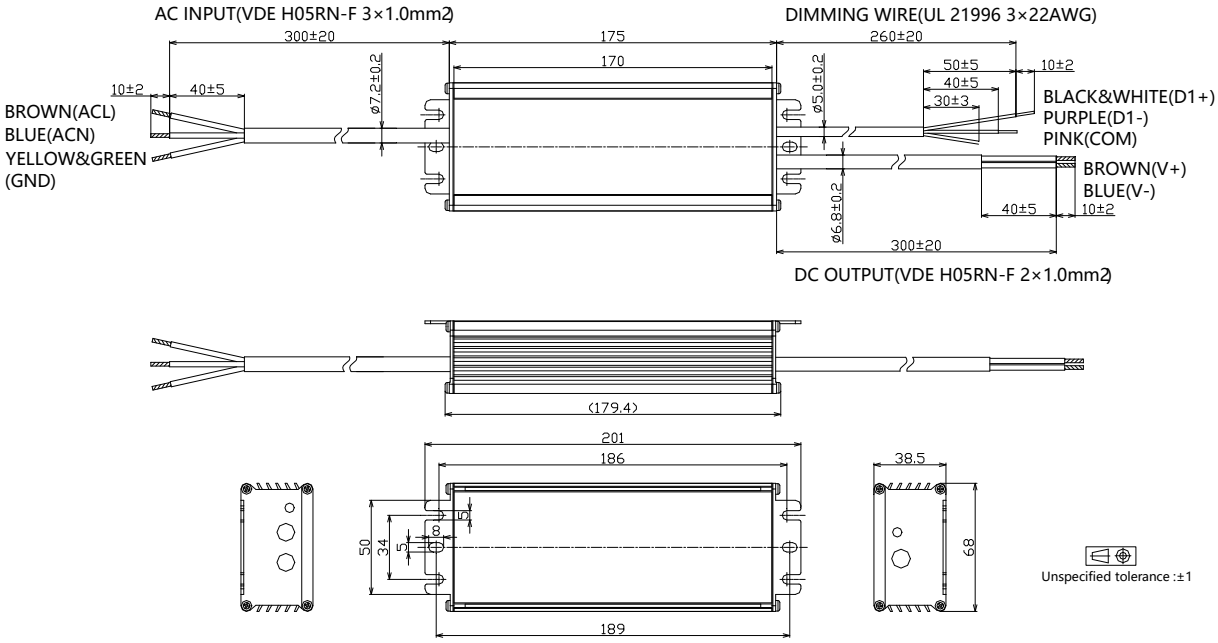

## Output Operation Range

| Model | Typical Set Output Current (mA) | Max Output Power (W) | Output Voltage Min (V) | Output Voltage Max(V) | Minimum Dimming Current (mA) |
|---|---|---|---|---|---|
| -C105 | 1050 | 200 | 114 | 190 | 105 |
| | 1000 | 200 | 120 | 200 | 100 |
| | 950 | 200 | 126 | 211 | 95 |
| | 900 | 200 | 133 | 222 | 90 |
| | 850 | 200 | 141 | 235 | 85 |
| | 800 | 200 | 150 | 250 | 80 |
| | 750 | 200 | 160 | 267 | 75 |
| | 700 | 200 | 171 | 286 | 70 |
| | 650 | 186 | 171 | 286 | 70 |
| | 600 | 171 | 171 | 286 | 70 |
| | 550 | 157 | 171 | 286 | 70 |
| | 500 | 143 | 171 | 286 | 70 |
| | … | … | … | … | … |
| | 70 | 20 | 171 | 286 | 70 |

| Model | Typical Set Output Current (mA) | Max Output Power (W) | Output Voltage Min (V) | Output Voltage Max(V) | Minimum Dimming Current (mA) |
|---|---|---|---|---|---|
| -C140 | 1400 | 200 | 86 | 143 | 140 |
| | 1300 | 200 | 92 | 154 | 130 |
| | 1200 | 200 | 100 | 167 | 120 |
| | 1100 | 200 | 109 | 182 | 110 |
| | 1050 | 200 | 114 | 190 | 105 |
| | 1000 | 190 | 114 | 190 | 105 |
| | 950 | 181 | 114 | 190 | 105 |
| | 900 | 171 | 114 | 190 | 105 |
| | 850 | 162 | 114 | 190 | 105 |
| | 800 | 152 | 114 | 190 | 105 |
| | 750 | 143 | 114 | 190 | 105 |
| | 700 | 133 | 114 | 190 | 105 |
| | … | … | … | … | … |
| | 105 | 20 | 114 | 190 | 105 |

July 25, 2024, all rights reserved.

| Model | Typical Set Output Current (mA) | Max Output Power (W) | Output Voltage Min (V) | Output Voltage Max(V) | Minimum Dimming Current (mA) |
|---|---|---|---|---|---|
| -C210 | 2100 | 200 | 57 | 95 | 210 |
| | 2000 | 200 | 60 | 100 | 200 |
| | 1900 | 200 | 63 | 105 | 190 |
| | 1800 | 200 | 67 | 111 | 180 |
| | 1700 | 200 | 71 | 118 | 170 |
| | 1600 | 200 | 75 | 125 | 160 |
| | 1500 | 200 | 80 | 133 | 150 |
| | 1400 | 200 | 86 | 143 | 140 |
| | 1300 | 186 | 86 | 143 | 140 |
| | 1200 | 171 | 86 | 143 | 140 |
| | 1100 | 157 | 86 | 143 | 140 |
| | 1000 | 143 | 86 | 143 | 140 |
| | … | … | … | … | … |
| | 140 | 20 | 86 | 143 | 140 |

| Model | Typical Set Output Current (mA) | Max Output Power (W) | Output Voltage Min (V) | Output Voltage Max(V) | Minimum Dimming Current (mA) |
|---|---|---|---|---|---|
| -C420 | 4200 | 200 | 29 | 48 | 420 |
| | 4100 | 200 | 29 | 49 | 410 |
| | 4000 | 200 | 30 | 50 | 400 |
| | 3900 | 200 | 31 | 51 | 390 |
| | 3800 | 200 | 32 | 53 | 380 |
| | 3700 | 200 | 32 | 54 | 370 |
| | 3600 | 200 | 33 | 56 | 360 |
| | 3500 | 200 | 34 | 57 | 350 |
| | 3400 | 200 | 35 | 59 | 340 |
| | 3300 | 200 | 36 | 61 | 330 |
| | 3200 | 200 | 38 | 63 | 320 |
| | 3100 | 200 | 39 | 65 | 310 |
| | 3000 | 200 | 40 | 67 | 300 |
| | 2900 | 200 | 41 | 69 | 290 |
| | 2800 | 200 | 43 | 71 | 280 |
| | 2700 | 193 | 43 | 71 | 280 |
| | 2600 | 186 | 43 | 71 | 280 |
| | … | … | … | … | … |
| | 280 | 20 | 43 | 71 | 280 |

| Model | Typical Set | Max Output | Output Voltage | Output Voltage | Minimum |
|---|---|---|---|---|---|

| | Output Current (mA) | Power (W) | Min (V) | Max(V) | Dimming Current (mA) |
|---|---|---|---|---|---|
| -C630 | 6300 | 200 | 19 | 32 | 630 |
| | 6100 | 200 | 20 | 33 | 610 |
| | 5900 | 200 | 20 | 34 | 590 |
| | 5700 | 200 | 21 | 35 | 570 |
| | 5500 | 200 | 22 | 36 | 550 |
| | 5300 | 200 | 23 | 38 | 530 |
| | 5100 | 200 | 24 | 39 | 510 |
| | 4900 | 200 | 24 | 41 | 490 |
| | 4700 | 200 | 26 | 43 | 470 |
| | 4500 | 200 | 27 | 44 | 450 |
| | 4400 | 200 | 27 | 45 | 440 |
| | 4300 | 195 | 27 | 45 | 440 |
| | 4200 | 191 | 27 | 45 | 440 |
| | 4100 | 186 | 27 | 45 | 440 |
| | 4000 | 182 | 27 | 45 | 440 |
| | 3900 | 177 | 27 | 45 | 440 |
| | 3800 | 173 | 27 | 45 | 440 |
| | … | … | … | … | … |
| | 440 | 20 | 27 | 45 | 440 |

July 25, 2024, all rights reserved.

## Revision History

| Revision | Date | Contents |
|---|---|---|
| E | 2022-03-22 | 1. Index page added<br>2. Reduced dimming interface sourcing current<br>3. DALI 2.0 compatibility added<br>4. Programming instruction added<br>5. Inrush current data added<br>6. Tc point position indication added<br>7. Dielectric strength level added<br>8. Packaging information added<br>9. Mechanical design change with dimming cable color<br>10. Revision history added |
| F | 2023-07-14 | 1. Update cable selection table in Model List Section |
| G | 2023-09-15 | 1. Update model selection table with -DN,-EN,DR models |
| H | 2024-07-25 | 1. Fast dimming description added<br>2. Power factor, THD, efficiency curves updated by 10-100% load range<br>3. MCB usage and driver quantity section added<br>4. Inrush current data updated |

July 25, 2024, all rights reserved.