SPECIFICATION

Product name: HVC-75H-108X

Release date: 2026/03/06

Add: Suncom Industrial Park, No.1 Yongyi 3rd Rd,Yongxing Industrial Zone, Henglan Town, ZhongShan,Guangdong,China 528478
400-136-4566
www.gdsuncom.com

Features·

- Class I type for insulation
- Input voltage range:200-277V ～ 50/60Hz
- Efficiency 90%（Typ.）
- Constant current output ,with power limitation for control mode
- Metal material case, protection grade against water and dust: IP65
- Surge level：

  differential mode : 6kV

  common mode :10kV
- guaranteed Lifetime ： 3 years

Applications

Street lamps, industrial and mining lamps and other lighting fixtures

Model list

Model NO.	Rated Input voltage	Max Output power	Output voltage	The default current	Eff.
HVC-75H-108A HVC-75H-108P	200-277V 50/60Hz (Power reduction when the input is less than 180Vac)	75W	54-108Vdc Rated Power（72-108V）	0.7A	89%

Note：

1. Test conditions: Ta=25℃, under 230Vac input,after running for 30 minutes with full load .

2. When the input is less than 180±20Vac, the output power gradually decreases,and it recoveries full power of 75W when the input is above 180VAC again. Please refer to “THE OUTPUT POWER VS INPUT VOLTAGE” curve chart for details.

Function List of optional models

Edition	Potentiometer	1-10V/PWM/Resistor	Off-line programming	AUX 12V+	Remark
A	√				
P	√	√	√		

Input characteristics

Parameter	Min	Typ.	Max	Remark
Rated input voltage	200Vac	230Vac	277Vac	-
Input voltage range	180Vac	-	305Vac	-
Rated frequency range	47Hz	50/60Hz	63Hz	-
Power factor	0.95	-	-	@230Vac input ,with full load
Power factor	0.9	-	-	@180-277Vac input ,with 70%-100%
T.H.D.	-	-	10%	@230Vac input ,with full load
T.H.D.	-	-	20%	@180-277Vac input ,with 70%-100%
Input current	-	-	0.6A	@180Vac input ,with full load
Inrush current	-	-	100A	230Vac, cold start (25℃)

Output characteristics

Parameter	Min	Typ.	Max	Remark
Rated current	-	0.7A	-	@230Vac input, 143Vdc
Output current range	0.5A	-	1.05A	The maximum output power is satisfied Po=Vo*Io=100W
Output voltage range	54V		108V	Constant power output range:72-108Vdc
Rated power(200-277Vac)	-	75W	-	-
No-load voltage	-	-	130V	-

Output characteristics

Parameter	Min	Typ.	Max	Remark
Efficiency@230Vac	-	89%	-	@230Vac input ,with full load
Accuracy of output current	-5%	-	+5%	For constant-power range , with full load
Output current ripple （PK-AV）		5%	10%	100% load，20 MHz BW
Line regulation	-5%	-	+5%	@full load
Load regulation	-5%	-	+5%	@full load
Starting time	-	-	1000ms	Full load@230Vac

Note: 1.The output current is limited by the input and output voltage, please refer to "I-V WORKING AREA" for details;

Dimming characteristics

Dimming function		Min	Typ.	Max	Instructions
1-10V Dimming （Optional）	Safe operation voltage range	1V	-	12V	Beyond the range may lead to a failure of the driver.
	Dimming output range	10%	-	100%	-
	Rated operation voltage range	1V	-	10V	-
PWM Dimming （Optional）	PWM high level	9.5V	-	10.5V	-
	PWM low level	0V	-	0.3V	-
	Rated dimming frequency	300Hz	-	2000Hz	-
	PWM duty cycle	10%	-	99%	full power output at 99%duty cycle
Resistor Dimming （Optional）	Rated external resistance value	10KΩ	-	100KΩ	-
	Dimming output range	10%	-	100%	-

Note:

1.Output current of dimming port: 100uA (typical value).

2.The maximum operation voltage for the dimming port is 12V. Wrong voltage beyond the range or a reverse connection may lead to a critical failure of the driver.

3.1-10V dimming, when the dimming signal is 0V, Vout drops to 40% of the rated voltage, the lamp board discharges through the Y capacitor, and there is a slight bright phenomenon (afterglow).

Protections

Protection	description
Input under-voltage protection	When the input voltage is less than 180±20Vac, the output power decreases.Refer to derating curve for details
Input over-voltage protection	When the input voltage is greater than 320±20Vac, the output power closed; when the fault is removed, the driver works normally
Output short circuit protection	Hiccup mode,and recovery automatically when the fault condition is removed.
Over temperature protection	Self-recoverable type; When the casing temperature is greater than 90±5°C, the output power decreases as the casing temperature increases
Output over-voltage protection	Protection mode:Hiccup or clamp at a certain output highest voltage state, the product will not be damaged, when the fault is removed, the driver works normally

Note:

1. Unless otherwise specified, all parameters should be measured at the condition of 230Vac (50Hz) input ,with rated load ,and ambient temperature of 25℃;
2. Including setting error, linear adjustment rate and load adjustment rate;

Environmental characteristics

Environmental categories	Parameter
Working temperature	-40 ~ +55℃@200-277Vac((Refer to "Service Life Curve"))
Safety case temperature	-40 ~ 90℃
Working humidity	20 ~ 95% RH,non-condensing
Storage temperature、humidity	-40~+80℃, 10 ~ 95% RH
Resistant to vibration	10 ~ 500Hz, 5G 12 min/cycle, X, Y, Z axis 72 min each
MTBF	230Khrs min. MIL-HDBK-217F (Ta=25℃)
Lifetime	30000 hours @230Vac,80% load, Tcase=75℃,.Refer to” Tcase VS Lifetime” curve for details.

Safety and EMC

Safety categories	Standard
Safety	GB19510.1、GB19510.14、EN61347-1、EN61347-2-13、IEC61347-1、IEC61347-2-13、AS/NZS61347.1、AS61347.2.13、EN 62384；
EMC	-
Surge level	Differential mode L-N ±6KV(2Ω),common mode L，N-PE±10KV (12Ω)　Refer toIEC61000-4-5 2014
High-pot test	I/P-PE:1.5KVac　I/P-O/P:3.75KVac　I/P-DIM:3.75KVac
Insulation impedance	I/P-PE:10MΩ / 500VDC;　I/P-O/P:10MΩ / 500VDC / 25℃/ 70% RH
Leakage current	<0.7mA@277Vac

Note:

1.Attention! As a component of the whole, the EMC performance of the final product is not only decided by the driver, even if the driver is well-designed and fulfil all the required compliance. The final equipment manufacturers must re-qualify EMC Directive on the complete product.

I-V Working area

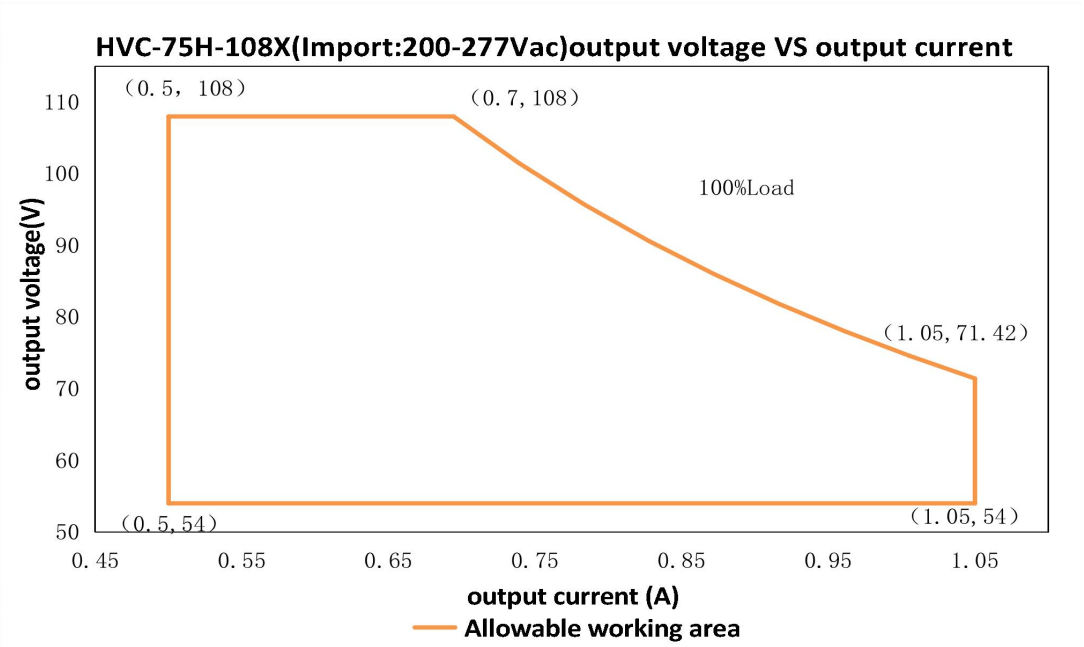

Load	Output								
Load working Voltage	54Vdc	60.75Vdc	67.5Vdc	74.25Vdc	81Vdc	87.75Vdc	94.5Vdc	101.25Vdc	108Vdc
Io_MAX	1.05A	1.05A	1.05A	1.01A	0.926A	0.855A	0.79A	0.74A	0.69A
Po_MAX	56.7W	63.787W	70.875W	75W	75W	75W	75W	75W	75W

Eff. VS Output voltage

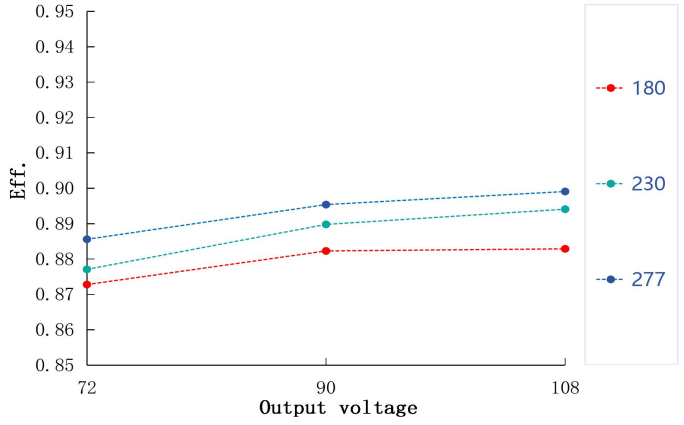

Power factor VS Input voltage

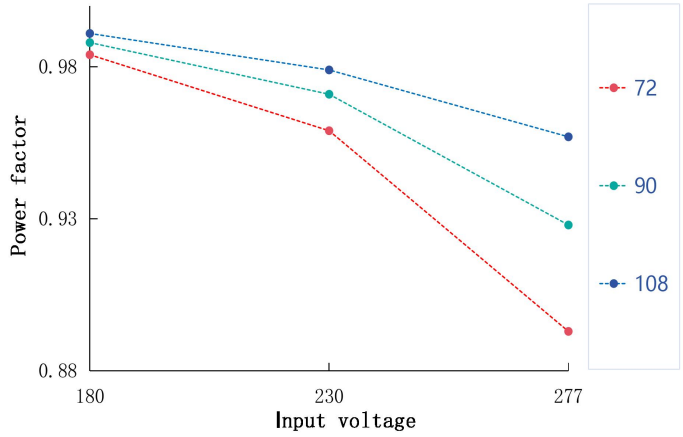

T.H.D. VS Output voltage

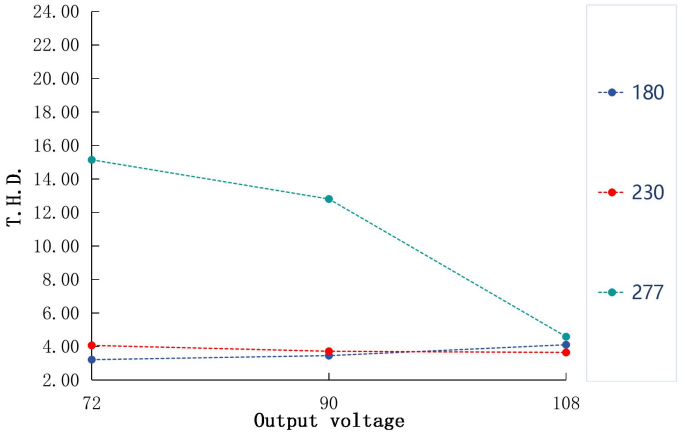

Tcase VS Life time

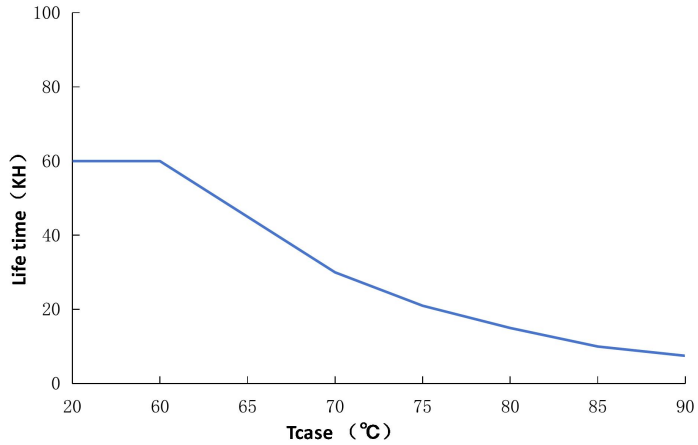

Output power VS Tcase

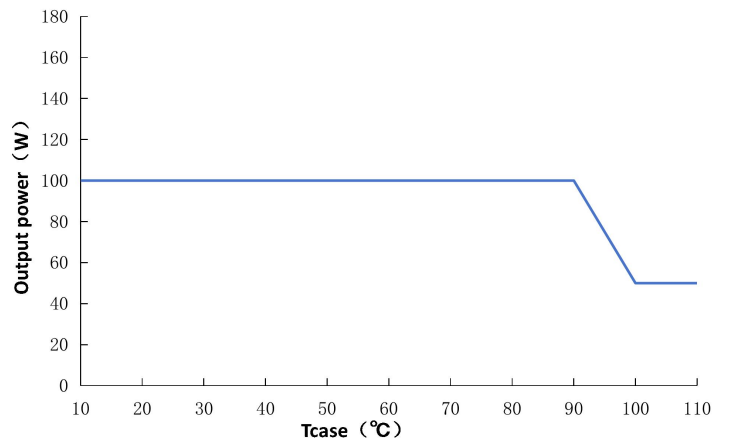

Output power VS Input voltage

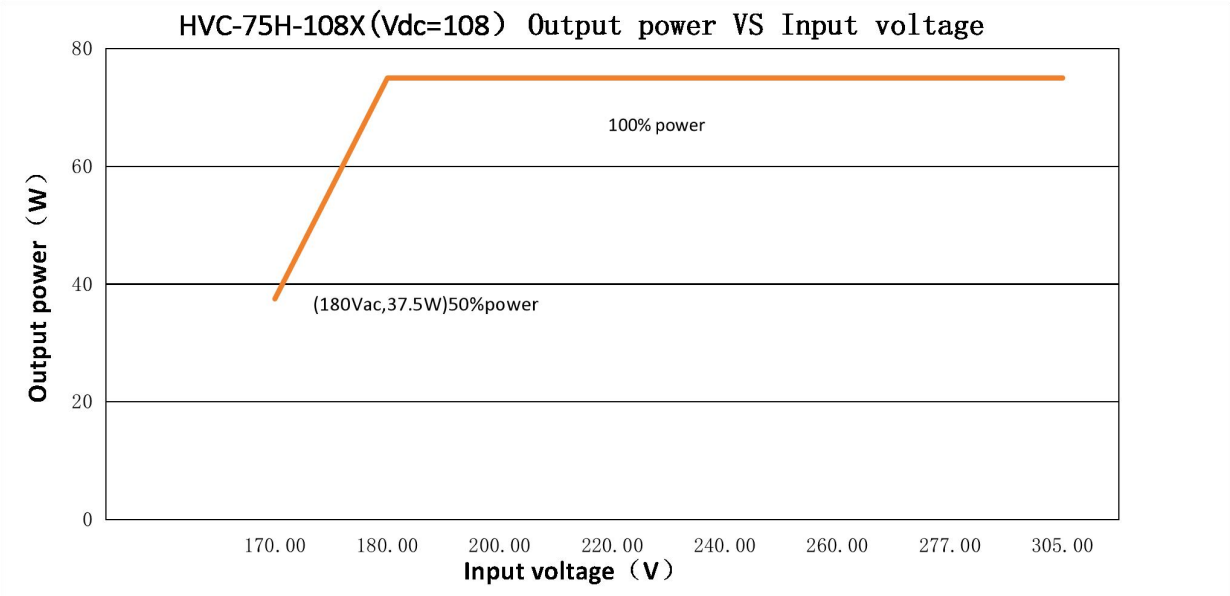

SAP-300W-56X(For output 56Vdc, the rated output current & power under different input voltage)								
Input Voltage	170Vac	180Vac	200Vac	220Vac	240Vac	260Vac	277Vac	305Vac
Io	0.35A	0.7A	0.7A	0.7A	0.7A	0.7A	0.7A	0.7A
Po	37.5W	75W	75W	75W	75W	75W	75W	75W

Dimming operation

Three-in-one dimming function (P/C version only)

- connect a resistor 0-100K or 0-10V DC voltage or 10V PWM signal between DIM+ and DIM- to adjust the output current
- output current of dimming port: 100uA (typical value). （to be determined!）

Applied voltage of 0-10V:

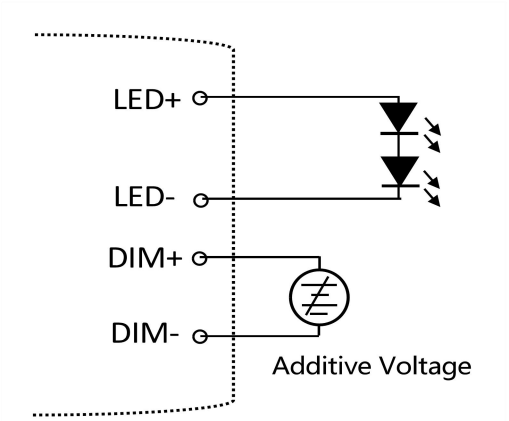

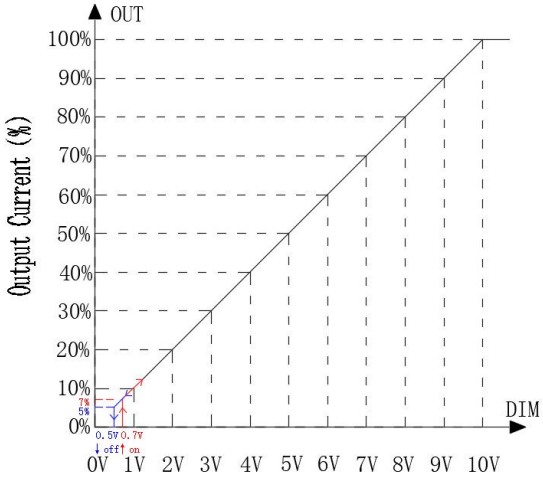

DIMMER INPUT: Voltage

Applying additive 10V PWM signal（Frequency range：300Hz-2KHz）：

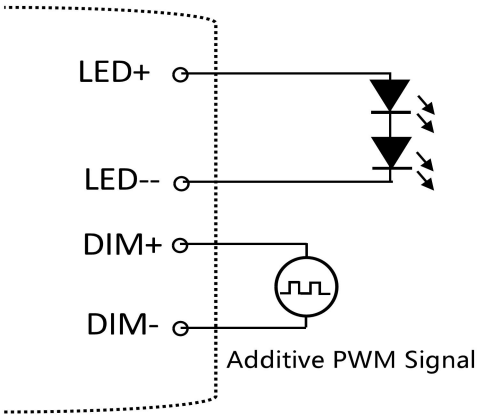

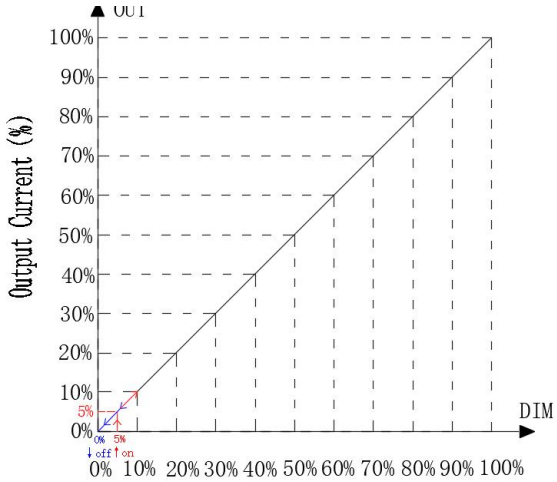

DIMMING INPUT: Pwm Signal Duty Cycle
(support 3.3-10V amplitude)

Applied an additional 0-100K resistor:

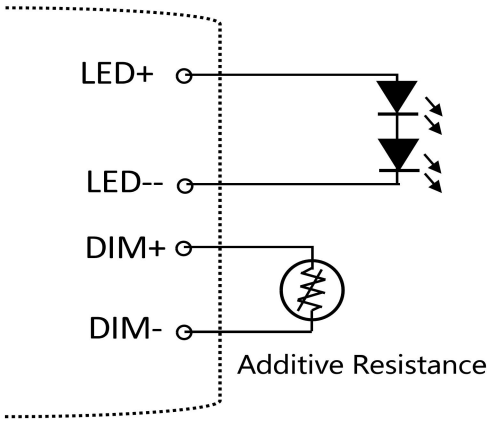

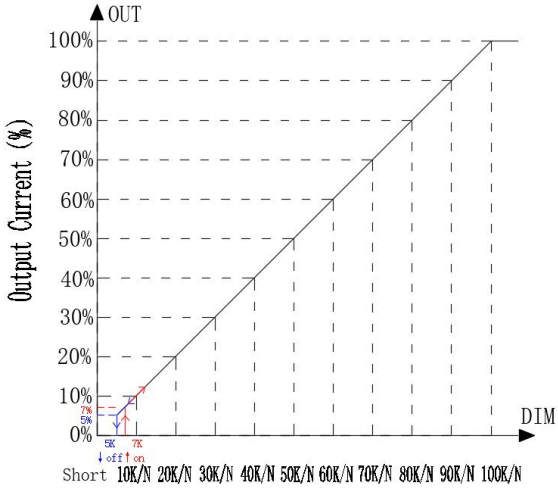

N=Number of drives for
synchronous dimming operation)
DIMMER INPUT: Resistor

Dimming Operation Instructions

When the dimming signal is 0V, the LED driver has no output, but there exists junction capacitance between the aluminum substrate’s copper foil and the grounding wire, which will make the LED beads glow slightly. Thus, it is necessary to respectively attach a resistor to every node of LED beads in parallel, and their resistance should match according to the parameters of aluminum substrate and LED beads.
(reference resistance: 3-5KΩ/size: 1206)

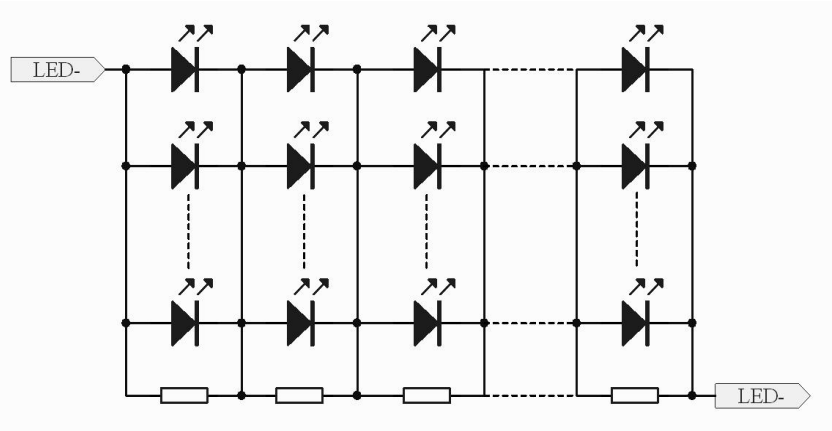

Installation Instructions

- When installing and wiring, the interface should be connected with solder or clamped with nipple cap or wire clamp to prevent the connector from falling off;
- The connector is tightly bound with electrical tape to ensure insulation;
- After wrapping the main line, the main line and the outer skin of the power input line are tightly bound with electrical adhesive tape for insulation, and then bound with waterproof adhesive tape to prevent water from entering the power supply from the power line port;
- The middle section of the power cord hangs down to reduce the possibility of water entering the power cord into the power supply;
- If the output line is also to be connected, the operation is the same as that of the input line;

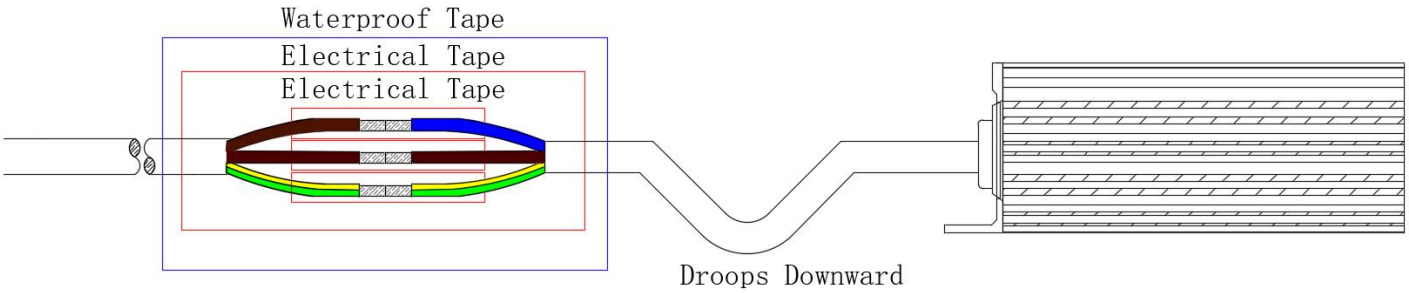

Mechanical specification

Size（mm）	L156*W60*H32.5(mm)
Weight（Kg）	0.54Kg
Packaging（mm）	

HVC-75H-108A

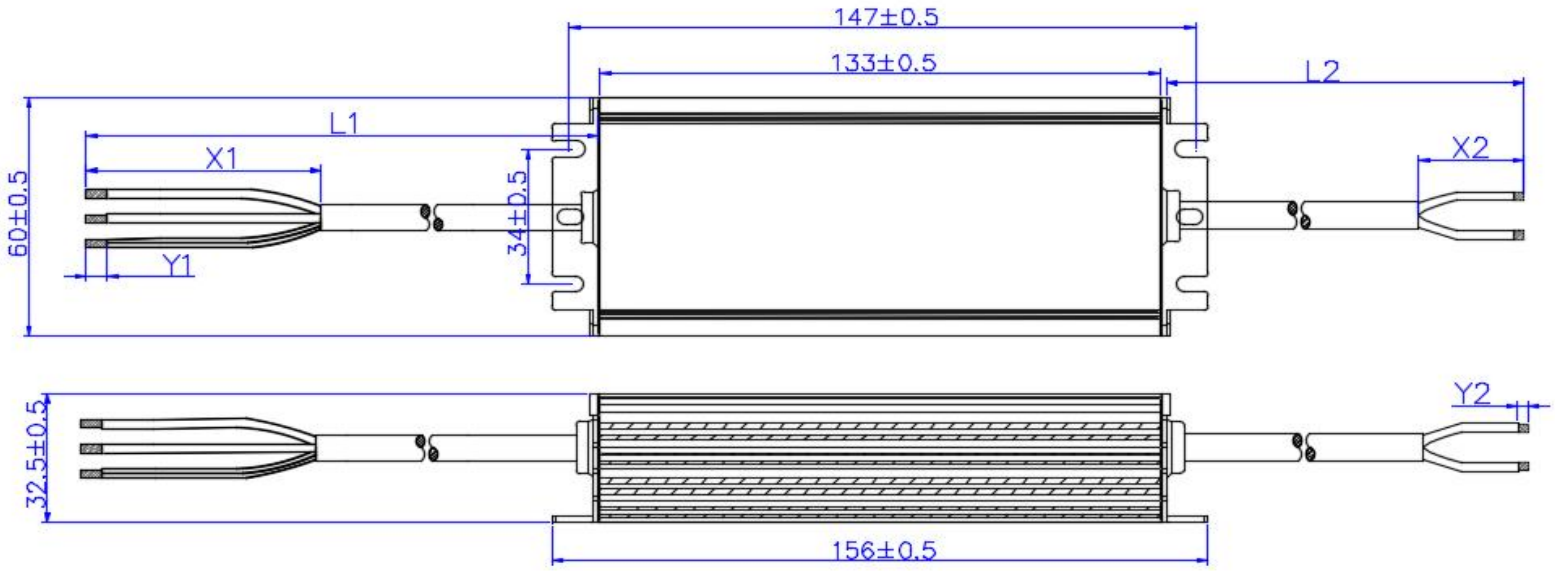

HVC-75H-108P

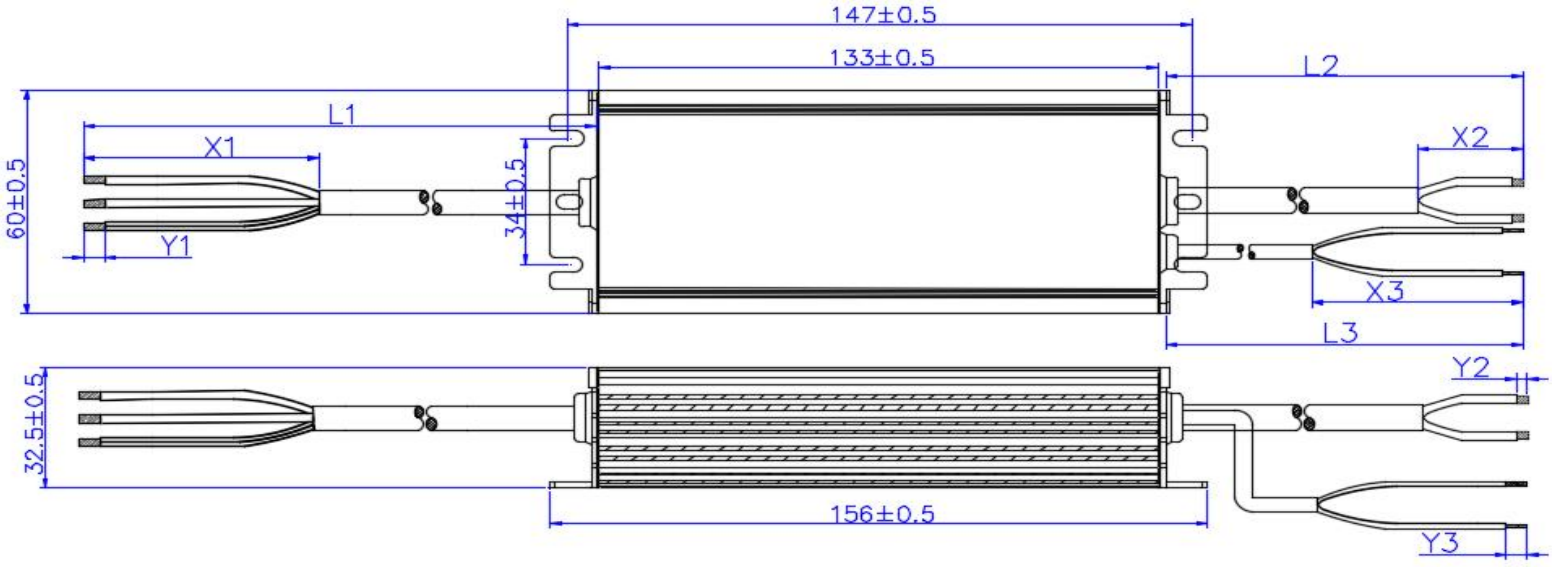

Type	Input Wire	Output Wire	Dimming Wire & AUX Output Wire
Specifications	H05RN-F 3*1.0mm² OD:7.2mm 300V/500V VDE/CCC/SAA	H05RN-F 2*1.0mm² OD:6.8mm 300/500V VDE/CCC/SAA	PVC 22AWG300V 105℃ OD: 4.8mm
Color	AC-L(Brown); AC-N(Blue);PG(Yellow/Green)	LED+(Brown);LED-(Blue)	DIM+(Purple);DIM-(Pink)
Length	440±10mm (L1)	290±10mm (L2)	290±10mm (L3)
Peeled	50±5mm(X1)	25±5mm(X2)	50±5mm(X3)
Tinned	10±1mm (Y1)	5±1mm (Y2)	10±1mm (Y3)
Remarks	/	/	P

Additional information

- It is recommended that user install the over voltage protection, under voltage protection and surge protection devices in the power supply circuits of light fixtures to ensure electricity safety.
- The LED driver used in combination with the end device is one of the accessories of the whole light fixture, and the EMC of the whole light fixture is not only susceptible to the driver itself, but to the LED light fixture and the whole light fixture's wiring. Thus, the manufacturer of LED light fixture should re-confirm the EMC of the whole light fixture before the whole light fixture is finished.
- The number of LED drivers that can be connected to a circuit breaker and the inrush current are tested under the same conditions.
- The PC cover, casing and end cap for assembling the LED driver in the light fixture must meet the fire rating of UL94-V0 or above.
- When using the LED driver, please pay attention that the total output power should not exceed the maximum rated output power, otherwise the warranty service of LED driver will fail.
- When conducting withstanding voltage test on LED driver, please short-circuit the input wire L and N; the positive electrode and negative electrode of the output wire; the positive electrode and negative electrode of the dimming wire and AUX power supply.

Transportation and Storage

- Suitable transportation means: vehicles, boats and aeroplanes.
- In transit, it is necessary to prepare awnings for rain or sun protection. Moreover, please keep civilized loading and unloading to prevent the vibration or impact on LED driver as much as possible.
- The storage of LED driver shall conform to the standard of Class I environment. When using LED drivers which have been stored for more than 6 months, please re-test them firstly. Do not use them unless they are tested to be qualified.

Cautions

- Please use SUNCOM LED driver according to its parameters in the specification, otherwise the LED driver may malfunction.
- Using any incompatible light fixtures or those that have not been certified may cause fire, explosion or other risks.
- Man-made damage is beyond the scope of SUNCOM warranty service.

RoHS

- The products comply with the EU RoHS Directive (2011/65/EU) and the EU Parliament 2015/863/EU amendment.

Disclaimer

- Remark: GUANGDONG SUNCOM POWER Technology Co., Ltd. reserves the right to interpret any content of this specification.

Version

DATE	DESCRIPTION	REV.	CHECK
2026.03.06	Initial version.	V1.0	