FOR 客户名称	APPROVED 客户确认签字	ATTN 销售负责人

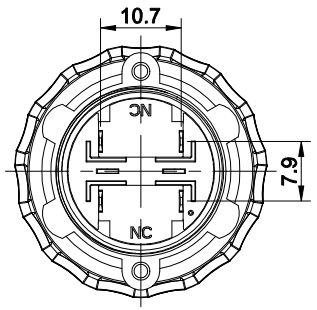

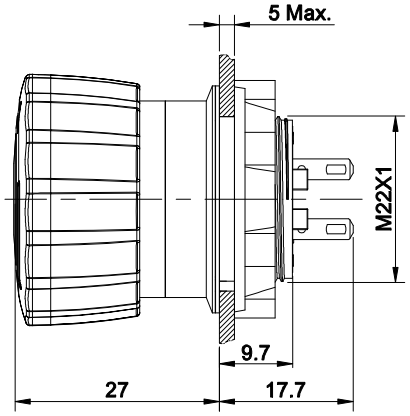

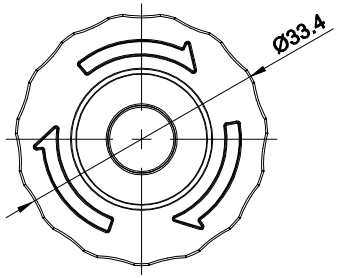

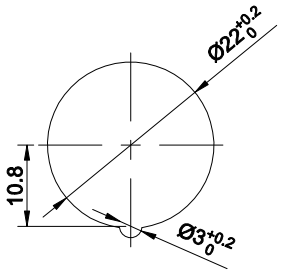

PANEL CUTOUT

TYPE	02(02NC)
ORGINAL STATE	
PRESS STATUS	
RELEASE STATE	

PART NUMBER:LAS1-A22Y-02TSB

SPECIFICATIONS:
1.SWITCH RATING: Ui:250V, Ith:5A.
2.MECHANICAL LIFE: ≥200,000 cycles.
3.ELECTRICAL LIFE: ≥50,000 cycles.
4.INITIAL CONTACT RESISTANCE: ≤50mΩ.
5.INSULATION RESISTANCE: ≥1000MΩ(500VDC).
6.POWER FREQUENCY WITHSTAND VOLTAGE: 1,500V, RMS 50Hz, 1min.
7.OPERATING TEMPERATURE: -25˚C~ +55˚C(NO FREEZING, KEEP THE AIR FLOWING AROUND PUSHBUTTON).
8.TORQUE: ABOUT 0.6N·m APPLIED TO NUT.
9.OPERATING FORCE: ABOUT 16N.
10.OPERATING TRAVEL: ABOUT 6mm.
11.FRONT PANEL PROTECTION DEGREE: IP65.
12.TERMINAL TYPE: PIN TERMINAL(2.8X0.5mm).
13.GENERAL TOLERANCE:0-18mm=±0.25, 18-80mm=±0.52.
14.COMPLIANT WITH RoHS.

MATERIALS:
1.CONTACT: SILVER ALLOY.
2.BUTTON: PBT/PC.
3.BODY: PA.
4.BASE: PA.

BRAND 品牌	ONPOW 欧宝龙®	红波按钮制造有限公司 ONPOW PUSH BUTTON MANUFACTURE CO.,LTD.			
TITLE 名称	LAS1-A22 SERIES EMERGENCY STOP SWITCH			UNIT 单位	mm
DWG NO. 图号	LAS1-A22Y-02TSB		SCALE 比例 1 : 1	SIZE 图纸	A4
FILE NAME 档案名称	LAS1-A22Y-TSB .DWG	DRAWN 制图 HCP 2025/07/08	SHEET 张 1/1	REV. 版本	V1.0