Global LCD Panel Exchange Center www.panelook.com 屏库:全球液晶屏交易中心



# SPECIFICATION
# FOR
# APPROVAL

( ) **Preliminary Specification**
(●) **Final Specification**

| Title | 86.0” QWUXGA TFT LCD |
|---|---|

| | |
|---|---|
| BUYER | AVNET |
| MODEL | |

| | |
|---|---|
| SUPPLIER | LG Display Co., Ltd. |
| *MODEL | LD860EQD |
| SUFFIX | FJM1 (RoHS Verified) |

| APPROVED BY | SIGNATURE DATE |
|---|---|
| / | |
| / | |
| / | |

Please return 1 copy for your confirmation with your signature and comments.

| APPROVED BY | SIGNATURE DATE |
|---|---|
| SungJun Lee / Team Leader | |
| **REVIEWED BY** | |
| BooYoung Kim / Project Leader | |
| **PREPARED BY** | |
| Byoungson Ryu / Engineer | |

**TV Product Development Dept.**
**LG Display Co., Ltd.**



One step solution for LCD / PDP / OLED panel application: Datasheet, inventory and accessory! www.panelook.com

Global LCD Panel Exchange Center www.panelook.com 屏库:全球液晶屏交易中心



# CONTENTS


| Number | ITEM | Page |
|---|---|---|
| | COVER | - |
| | CONTENTS | 1 |
| | RECORD OF REVISIONS | 2 |
| 1 | GENERAL DESCRIPTION | 3 |
| 2 | ABSOLUTE MAXIMUM RATINGS | 4 |
| 3 | ELECTRICAL SPECIFICATIONS | 5 |
| 3-1 | ELECTRICAL CHARACTERISTICS | 6 |
| 3-2 | INTERFACE CONNECTIONS | 7 |
| 3-3 | SIGNAL TIMING SPECIFICATIONS | 12 |
| 3-4 | V by One SIGNAL SPECIFICATIONS | 13 |
| 3-5 | COLOR DATA REFERENCE | 14 |
| 3-6 | POWER SEQUENCE | 15 |
| 4 | OPTICAL SPECIFICATIONS | 17 |
| 5 | MECHANICAL CHARACTERISTICS | 21 |
| 6 | RELIABILITY | 24 |
| 7 | | 25 |
| 7-1 | SAFETY | 25 |
| 7-2 | ENVIRONMENT | 25 |
| 8 | PACKING | 26 |
| 8-1 | INFORMATION OF LCM LABEL | 26 |
| 8-2 | PACKING FORM | 26 |
| 9 | PRECAUTIONS | 27 |
| 9-1 | MOUNTING PRECAUTIONS | 27 |
| 9-2 | OPERATING PRECAUTIONS | 27 |
| 9-3 | ELECTROSTATIC DISCHARGE CONTROL | 28 |
| 9-4 | PRECAUTIONS FOR STRONG LIGHT EXPOSURE | 28 |
| 9-5 | STORAGE | 28 |




One step solution for LCD / PDP / OLED panel application: Datasheet, inventory and accessory! www.panelook.com

Global LCD Panel Exchange Center www.panelook.com 屏库:全球液晶屏交易中心



# RECORD OF REVISIONS

| Revision No. | Revision Date | Page | Description |
|---|---|---|---|
| 0.1 | Nov, 10, 2015 | - | Preliminary Specification (First Draft) |
| 0.2 | Jan, 19, 2016 | 8, 33 | Change the Local dimming option (Default on) |
| 0.3 | Jan, 29, 2016 | 3, 20 | Change LCM weight |
| 0.4 | Feb, 15, 2016 | 35 | Update the Gt0G result |
| 0.5 | Feb, 23, 2016 | 28, 29 | Update the appropriate Condition for Commercial Display. |
| 0.6 | Mar, 04, 2016 | 3, 6 | Update the LED driver power consumption |
| 1.0 | Mar, 21, 2016 | - | Final CAS |

www.panelook.com



One step solution for LCD / PDP / OLED panel application: Datasheet, inventory and accessory! www.panelook.com

Global LCD Panel Exchange Center www.panelook.com 屏库:全球液晶屏交易中心



## 1. General Description

The LD860EQD is a Color Active Matrix Liquid Crystal Display with an integral Light Emitting Diode (LED) backlight system. The matrix employs a-Si Thin Film Transistor as the active element.
It is a transmissive display type which is operating in the normally black mode. It has a 85.60 inch diagonally measured active display area with QWUXGA resolution (2160 vertical by 3840 horizontal pixel array).
Each pixel is divided into Red, Green and Blue sub-pixels or dots which are arrayed in vertical stripes.
Gray scale or the luminance of the sub-pixel color is determined with a 10-bit gray scale signal for each dot.
Therefore, it can present a palette of more than 1.07Bilion colors.
It has been designed to apply the 10-bit 16 Lane V by One interface.
It is intended to support LCD TV, PCTV where high brightness, super wide viewing angle, high color gamut, high color depth and fast response time are important.

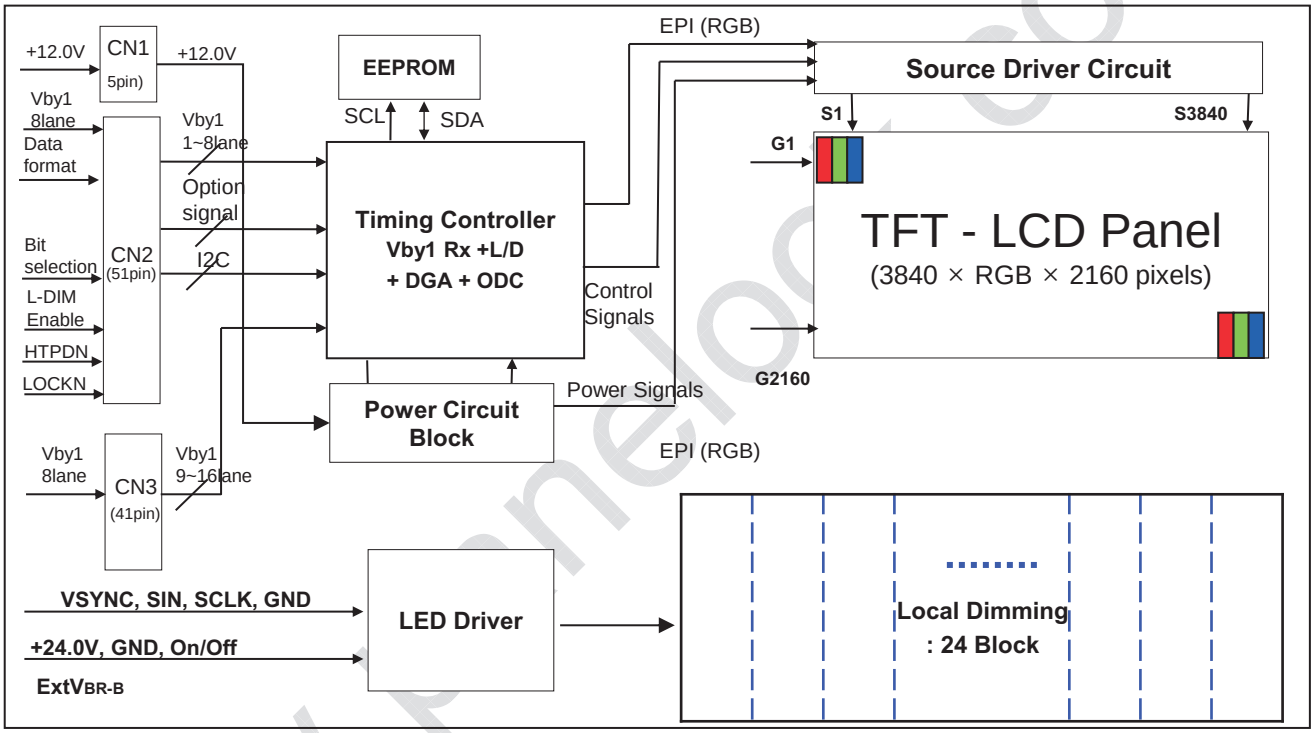


| | |
|---|---|
| Active Screen Size | 85.60 inches(2174.27 mm) diagonal |
| Outline Dimension | 1922.2 (H) × 1093.2 (V) X 13.6 (B) (Typ.) |
| Pixel Pitch | 0.4935 mm x 0.4935 mm |
| Pixel Format | 3840 horiz. by 2160 vert. Pixels, RGB stripe arrangement |
| Color Depth | 10bit(D), 1.07Billon colors |
| Luminance, White | 500 cd/m$^2$ (Center 1point ,Typ.) |
| Viewing Angle (CR>10) | Viewing angle free ( R/L 178 (Min.), U/D 178 (Min.)) |
| Power Consumption | Total 214.3 W (Typ.) [Logic= 13.4 W, LED Driver= 200.9 W (ExtVbr_B=100%) |
| Weight | 34.1 Kg (Typ.) |
| Display Mode | Transmissive mode, Normally black |
| Surface Treatment | Hard coating(2H), Anti-glare low reflection treatment of the front polarizer (Haze 3%(Typ.)) |



One step solution for LCD / PDP / OLED panel application: Datasheet, inventory and accessory! www.panelook.com

Global LCD Panel Exchange Center www.panelook.com 屏库:全球液晶屏交易中心



## 2. Absolute Maximum Ratings

The following items are maximum values which, if exceeded, may cause faulty operation or permanent damage to the LCD module.

**Table 1. ABSOLUTE MAXIMUM RATINGS**

| Parameter | | Symbol | Value | | Unit | Note |
|---|---|---|---|---|---|---|
| | | | Min | Max | | |
| Power Input Voltage | LCD Circuit | $V_{LCD}$ | -0.3 | +14.0 | $V_{DC}$ | 1 |
| Driver Control Voltage | ON/OFF | $V_{OFF}$ / $V_{ON}$ | -0.3 | +3.9 | $V_{DC}$ | |
| | Brightness | **EXTV**$_{BR-B}$ | -0.3 | +3.9 | $V_{DC}$ | |
| | Status | Status | -0.3 | +3.9 | $V_{DC}$ | |
| T-Con Option Selection Voltage | | $V_{LOGIC}$ | -0.3 | +4.0 | $V_{DC}$ | |
| Operating Temperature | | $T_{OP}$ | 0 | +50 | °C | 2,3 |
| Storage Temperature | | $T_{ST}$ | -20 | +60 | °C | |
| Panel Front Temperature | | $T_{SUR}$ | - | +68 | °C | 4 |
| Operating Ambient Humidity | | $H_{OP}$ | 10 | 90 | %RH | 2,3 |
| Storage Humidity | | $H_{ST}$ | 5 | 90 | %RH | |

Note

1. Ambient temperature condition (Ta = 25 ± 2 °C )
2. Temperature and relative humidity range are shown in the figure below.
   Wet bulb temperature should be Max 39°C, and no condensation of water.
3. Gravity mura can be guaranteed below 40°C condition.
4. The maximum operating temperatures is based on the test condition that the surface temperature of display area is less than or equal to 68°C with LCD module alone in a temperature controlled chamber. Thermal management should be considered in final product design to prevent the surface temperature of display area from being over 68℃. The range of operating temperature may be degraded in case of improper thermal management in final product design.

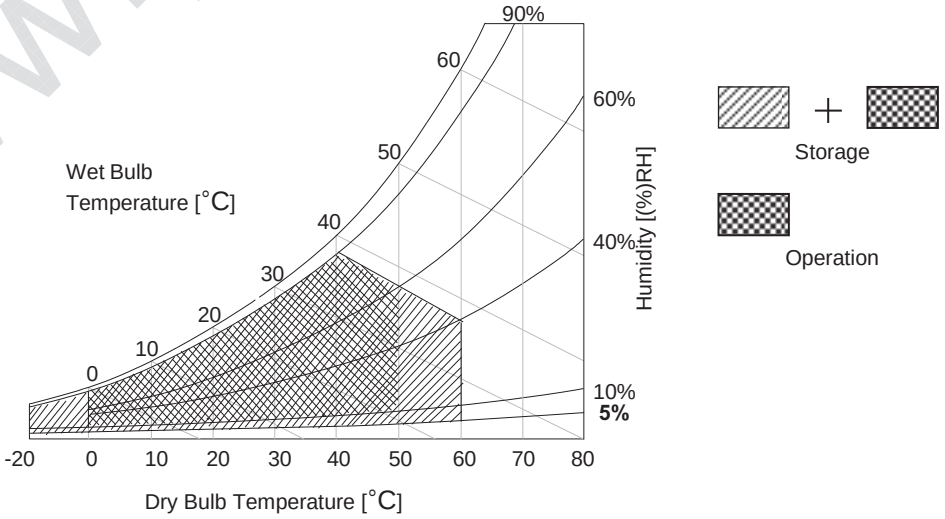




One step solution for LCD / PDP / OLED panel application: Datasheet, inventory and accessory! www.panelook.com

Global LCD Panel Exchange Center www.panelook.com 屏库:全球液晶屏交易中心



## 3. Electrical Specifications

### 3-1. Electrical Characteristics

It requires two power inputs. One is employed to power for the LCD circuit. The other Is used for the LED backlight and LED Driver circuit.

**Table 2. ELECTRICAL CHARACTERISTICS**

| Parameter | | Symbol | Value | | | Unit | notes |
|---|---|---|---|---|---|---|---|
| | | | Min | Typ | Max | | |
| **Circuit :** | | | | | | | |
| Power Input Voltage | | $V_{LCD}$ | 10.8 | 12.0 | 13.2 | $V_{DC}$ | |
| Power Input Current | | $I_{LCD}$ | - | 1113 | 1447 | mA | 1 |
| | | | - | 4103 | 5334 | mA | 2 |
| T-CON Option Selection Voltage | Input High Voltage | $V_{IH}$ | 2.7 | - | 3.6 | $V_{DC}$ | |
| | Input Low Voltage | $V_{IL}$ | 0 | - | 0.7 | $V_{DC}$ | |
| Power Consumption | | $P_{LCD}$ | - | 13.4 | 17.4 | Watt | 1 |
| Rush current | | $I_{RUSH}$ | - | - | 12.0 | A | 3 |

notes

1. The specified current and power consumption are under the $V_{LCD}$=12.0V, Ta=25 ± 2°C, $f_V$=120Hz condition, and mosaic pattern(8 x 6) is displayed and $f_V$ is the frame frequency.
2. The current is specified at the maximum current pattern.
3. The duration of rush current is about 2ms and rising time of power input is 0.5ms (min.).
4. Ripple voltage level is recommended under ±5% of typical voltage

White : 1023 Gray
Black : 0 Gray

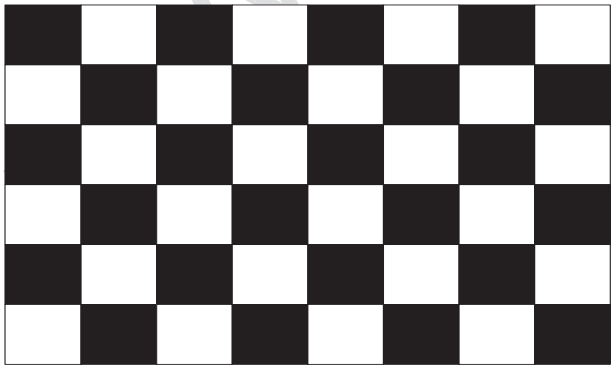

**Mosaic Pattern(8 x 6)**

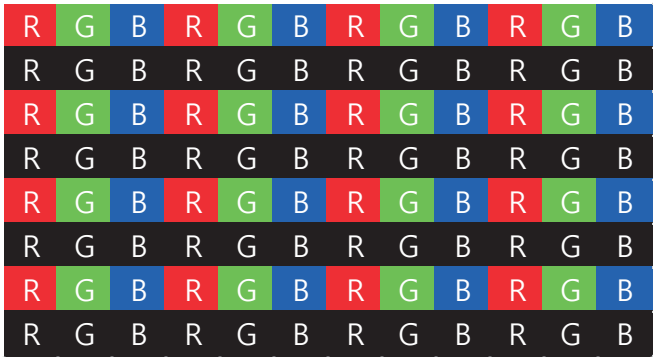


**Max Current Pattern**



One step solution for LCD / PDP / OLED panel application: Datasheet, inventory and accessory! www.panelook.com

Global LCD Panel Exchange Center www.panelook.com 屏库:全球液晶屏交易中心



**Table 3. ELECTRICAL CHARACTERISTICS (Continue)**

| Parameter | | | Symbol | Values | | | Unit | Notes |
|---|---|---|---|---|---|---|---|---|
| | | | | Min | Typ | Max | | |
| LED Driver : | | | | | | | | |
| Power Supply Input Voltage | | | VBL | 21.6 | 24.0 | 26.4 | Vdc | 1 |
| Power Supply Input Current | | | IBL | – | 8.37 | 9.07 | A | 1 |
| Power Supply Input Current (In-Rush) | | | In-rush | – | – | 14 | A | VBL = 21.6V ExtVBR-B=100% 3 |
| Power Consumption (Total) | | | PBL | – | 200.9 | 217.7 | W | 1 |
| Input Voltage for Control System Signals | On/Off | On | V on | 2.5 | – | 3.6 | Vdc | |
| | | Off | V off | -0.3 | 0.0 | 0.7 | Vdc | |
| | Brightness Adjust | | ExtVBR-B | 1 | – | 100 | % | On Duty 5 |
| | PWM Frequency for NTSC & PAL | | PAL | | 100 | | Hz | 2 |
| | | | NTSC | | 120 | | Hz | 2 |
| | Pulse Duty Level (PWM) | | HighLevel | 2.5 | – | 3.6 | Vdc | HIGH : on duty LOW : off duty |
| | | | Low Level | 0.0 | – | 0.7 | Vdc | |
| LED : | | | | | | | | |
| Life Time | | | | 30,000 | | | Hrs | 6 |

Notes :

1. Electrical characteristics are determined after the unit has been 'ON' and stable for approximately 60 minutes at 25±2°C. The specified current and power consumption are under the typical supply Input voltage 24Vand $V_{BR}$ ($Ext_{VBR-B}$ : 100%), it is total power consumption.
2. LGD recommend that the PWM freq. is synchronized with One time harmonic of V_sync signal of system. Though PWM frequency is over 120Hz (max 252Hz), function of LED Driver is not affected.
3. The duration of rush current is about 200ms. This duration is applied to LED on time
4. Even though inrush current is over the specified value, there is no problem if $I^2T$ spec of fuse is satisfied.
5. Ext_PWM Signal have to input available duty range.
   Between 99% and 100% ExtVBR-B duty have to be avoided. ( 99% < ExtVBR-B < 100%)
   But ExtVBR-B 0% and 100% is possible.
6. The life time is determined as the time at which brightness of the LED is 50% compared to that of initial value at the typical LED current on condition of continuous operating at 25 ± 2°C, based on duty 100%.

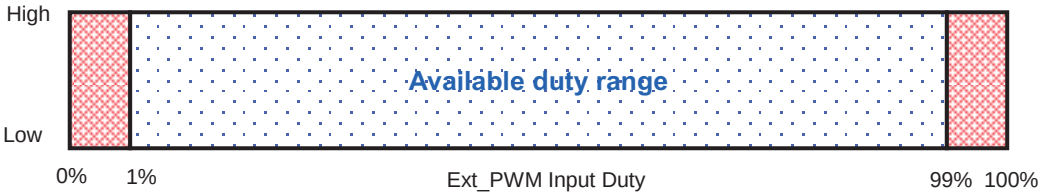




One step solution for LCD / PDP / OLED panel application: Datasheet, inventory and accessory! www.panelook.com

Global LCD Panel Exchange Center www.panelook.com 屏库:全球液晶屏交易中心



## 3-2. Interface Connections

This LCD module employs theree kinds of interface connection, 5-pin connector, 51-pin connector and 41-pin connector are used for the module electronics and 14-pin,12-pin connector is used for the integral backlight system.

### 3-2-1. LCD Module

- LCD Connector(CN1): 20037WR-H05 (manufactured by YEONHO)

**Table 4-1. MODULE CONNECTOR(CN1) PIN CONFIGURATION**

| No | Symbol | Description |
|---|---|---|
| 1 | GND | Ground |
| 2 | GND | Ground |
| 3 | VLCD | Power Supply +12.0V |
| 4 | VLCD | Power Supply +12.0V |
| 5 | VLCD | Power Supply +12.0V |

www.panelook.com



One step solution for LCD / PDP / OLED panel application: Datasheet, inventory and accessory! www.panelook.com

Global LCD Panel Exchange Center www.panelook.com 屏库:全球液晶屏交易中心



- LCD Connector(CN1): FI-RXE51S-HF (manufactured by JAE) or compatible or GT05S-51S-H38 (manufactured by LSM) or IS050-C51B-C39-C(manufactured by UJU)

**Table 4-2. MODULE CONNECTOR(CN2) PIN CONFIGURATION**

| No | Symbol | Description | No | Symbol | Description |
|---|---|---|---|---|---|
| 1 | NC | No Connection(notes 2) | 27 | GND | Ground |
| 2 | NC | No Connection(notes 2) | 28 | Rx0n | V-by-One HS Data Lane 0 |
| 3 | NC | No Connection(notes 2) | 29 | Rx0p | V-by-One HS Data Lane 0 |
| 4 | NC | No Connection(notes 2) | 30 | GND | Ground |
| 5 | NC | No Connection(notes 2) | 31 | Rx1n | V-by-One HS Data Lane 1 |
| 6 | NC | No Connection(notes 2) | 32 | Rx1p | V-by-One HS Data Lane 1 |
| 7 | NC | No Connection(notes 2) | 33 | GND | Ground |
| 8 | NC | No Connection(notes 2) | 34 | Rx2n | V-by-One HS Data Lane 2 |
| 9 | NC | No Connection | 35 | Rx2p | V-by-One HS Data Lane 2 |
| 10 | GND | Ground | 36 | GND | Ground |
| 11 | GND | Ground | 37 | Rx3n | V-by-One HS Data Lane 3 |
| 12 | GND | Ground | 38 | Rx3p | V-by-One HS Data Lane 3 |
| 13 | GND | Ground | 39 | GND | Ground |
| 14 | GND | Ground | 40 | Rx4n | V-by-One HS Data Lane 4 |
| 15 | Data format 0 | Input Data Format [1:0] : ‘00’=Mode1, ’01’=Mode2, ’10’=Mode3, ’11’=Mode4 | 41 | Rx4p | V-by-One HS Data Lane 4 |
| 16 | Data format 1 | | 42 | GND | Ground |
| 17 | NC | No Connection (notes 4) | 43 | Rx5n | V-by-One HS Data Lane 5 |
| 18 | SDA | SDA (For Local Dimming) | 44 | Rx5p | V-by-One HS Data Lane 5 |
| 19 | SCL | SCL (For Local Dimming) | 45 | GND | Ground |
| 20 | WP | Write Protection (For Local Dimming) | 46 | Rx6n | V-by-One HS Data Lane 6 |
| 21 | Bit SEL | ‘H’ or NC= 10bit(D) , ‘L’ = 8bit | 47 | Rx6p | V-by-One HS Data Lane 6 |
| 22 | L-DIM Enable | ‘H’ = Enable | 48 | GND | Ground |
| 23 | AGP or NSB | ‘H’ or NC : AGP<br>‘L’ : NSB (No signal Black) | 49 | Rx7n | V-by-One HS Data Lane 7 |
| 24 | GND | Ground | 50 | Rx7p | V-by-One HS Data Lane 7 |
| 25 | HTPDN | Hot plug detect | 51 | GND | Ground |
| 26 | LOCKN | Lock detect | - | - | - |

notes
1. All GND (ground) pins should be connected together to the LCD module’s metal frame.
2. #1~#8 NC (No connection ) : These pins are used for back up power source, $V_{LCD}$ (power input) . These pins are should be connected together.
3. All Input levels of V-by-One signals are based on the V-by-One HS Standard Version 1.3.
4. Specific pin (**#22**) is used for Local Dimming function of the LCD module. If not used, connect to GND. (Please see the **Appendix IV-3** for more information.)
5. About specific pin (#15,#16) , Please see the **Appendix X**.
6. Specific pin No. **#23** is used for “No signal detection” of system signal interface. It should be GND for NSB (No Signal Black) while the system interface signal is not. If this pin is “H” or “NC”, LCD Module displays AGP (Auto Generation Pattern).
7. *Specific pin (pin No. #18, #19 ,#20) is used for Controlling Local Dimming register in the LCM Module.*



One step solution for LCD / PDP / OLED panel application: Datasheet, inventory and accessory! www.panelook.com

Global LCD Panel Exchange Center www.panelook.com 屏库:全球液晶屏交易中心



- LCD Connector (CN2) : FI-RXE41S-HF (manufactured by JAE) or GT05S-41S-H38(manufactured by LSM) or IS050-C41B-C39-C(manufactured by UJU)

**Table 4-3. MODULE CONNECTOR(CN3) PIN CONFIGURATION**

| No | Symbol | Description | No | Symbol | Description |
|---|---|---|---|---|---|
| 1 | GND | Ground | 22 | GND | Ground |
| 2 | Rx8n | V-by-One HS Data Lane 8 | 23 | Rx15n | V-by-One HS Data Lane 15 |
| 3 | Rx8p | V-by-One HS Data Lane 8 | 24 | Rx15p | V-by-One HS Data Lane 15 |
| 4 | GND | Ground | 25 | GND | Ground |
| 5 | Rx9n | V-by-One HS Data Lane 9 | 26 | NC | NO CONNECTION |
| 6 | Rx9p | V-by-One HS Data Lane 9 | 27 | NC | NO CONNECTION |
| 7 | GND | Ground | 28 | NC | NO CONNECTION |
| 8 | Rx10n | V-by-One HS Data Lane 10 | 29 | NC | NO CONNECTION |
| 9 | Rx10p | V-by-One HS Data Lane 10 | 30 | NC | NO CONNECTION |
| 10 | GND | Ground | 31 | NC | NO CONNECTION |
| 11 | Rx11n | V-by-One HS Data Lane 11 | 32 | NC | NO CONNECTION |
| 12 | Rx11p | V-by-One HS Data Lane 11 | 33 | NC | NO CONNECTION |
| 13 | GND | Ground | 34 | NC | NO CONNECTION |
| 14 | Rx12n | V-by-One HS Data Lane 12 | 35 | NC | NO CONNECTION |
| 15 | Rx12p | V-by-One HS Data Lane 12 | 36 | NC | NO CONNECTION |
| 16 | GND | Ground | 37 | NC | NO CONNECTION |
| 17 | Rx13n | V-by-One HS Data Lane 13 | 38 | NC | NO CONNECTION |
| 18 | Rx13p | V-by-One HS Data Lane 13 | 39 | NC | NO CONNECTION |
| 19 | GND | Ground | 40 | NC | NO CONNECTION |
| 20 | Rx14n | V-by-One HS Data Lane 14 | 41 | NC | NO CONNECTION |
| 21 | Rx14p | V-by-One HS Data Lane 14 | - | | |

notes : 1. All GND (ground) pins should be connected together to the LCD module's metal frame.
2. #26~#41 NC (No Connection) : These pins are used only for LGD (Do not connect)

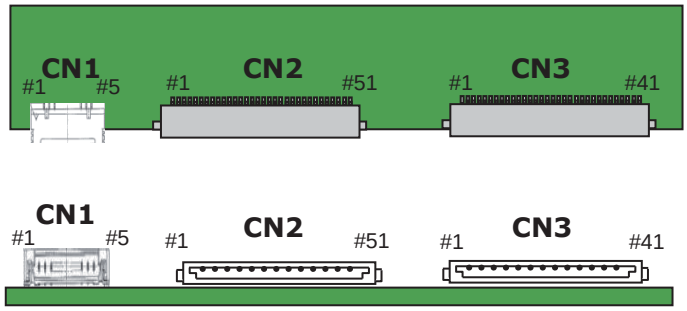


**Rear view of LCM**



One step solution for LCD / PDP / OLED panel application: Datasheet, inventory and accessory! www.panelook.com

Global LCD Panel Exchange Center www.panelook.com 屏库:全球液晶屏交易中心



### 3-2-2. Backlight Module

Master
-LED Driver Connector
: 20022WR - H14B2(Yeonho) , 20022WR-H12B2(Yeonho)

**Table 5-1. LED DRIVER CONNECTOR PIN CONFIGURATION**

| Pin No | Symbol | Description (CN_A1) | Description (CN_A2) | Note |
|---|---|---|---|---|
| 1 | VBL | Power Supply +24.0V | Power Supply +24.0V | |
| 2 | VBL | Power Supply +24.0V | Power Supply +24.0V | |
| 3 | VBL | Power Supply +24.0V | Power Supply +24.0V | |
| 4 | VBL | Power Supply +24.0V | Power Supply +24.0V | |
| 5 | VBL | Power Supply +24.0V | Power Supply +24.0V | |
| 6 | GND | Backlight Ground | Backlight Ground | 1 |
| 7 | GND | Backlight Ground | Backlight Ground | |
| 8 | GND | Backlight Ground | Backlight Ground | |
| 9 | GND | Backlight Ground | Backlight Ground | |
| 10 | GND | Backlight Ground | Backlight Ground | |
| 11 | Status | Backlight Status | Don't care | 2 |
| 12 | VON/OFF | Backlight ON/OFF control | Don't care | |
| 13 | NC | Don't care | | |
| 14 | EXTVBR_B | External PWM | | 3 |

notes : 1. GND should be connected to the LCD module's metal frame.
2. Normal : Low (under 0.7V) / Abnormal : Open
3. High : on duty / Low : off duty, Pin#14 can be opened. ( if Pin #14 is open , EXTVBR-B is 100% )
4. Each impedance of pin #12 and 14 is over 50 [KΩ] .

◆ Rear view of LCM

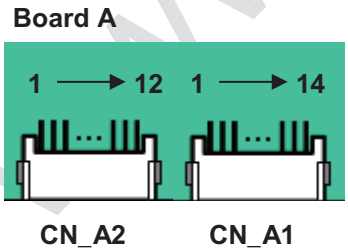


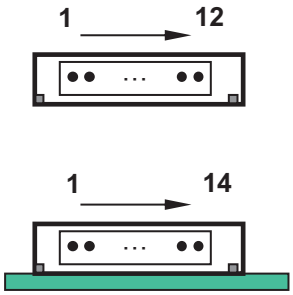


◆ Status

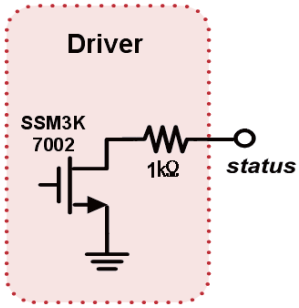




One step solution for LCD / PDP / OLED panel application: Datasheet, inventory and accessory! www.panelook.com

Global LCD Panel Exchange Center www.panelook.com 屏库:全球液晶屏交易中心



### 3-3. Signal Timing Specifications

Table 6 shows the signal timing required at the input of the LVDS transmitter. All of the interface signal timings should be satisfied with the following specification for normal operation.

**Table 6. TIMING TABLE (DE Only Mode)**

| ITEM | | Symbol | Min | Typ | Max | Unit | Note |
|---|---|---|---|---|---|---|---|
| Horizontal | Display Period | $t_{HV}$ | 240 | 240 | 240 | $t_{CLK}$ | 3840/16 |
| | Blank | $t_{HB}$ | 25 | 35 | 60 | $t_{CLK}$ | 1 |
| | Total | $t_{HP}$ | 265 | 275 | 300 | $t_{CLK}$ | |
| Vertical | Display Period | $t_{VV}$ | 2160 | 2160 | 2160 | Lines | |
| | Blank | $t_{VB}$ | 40 | 90 | 600 | Lines | 1 |
| | Total | $t_{VP}$ | 2200 | 2250 | 2760 | Lines | |

| ITEM | | Symbol | Min | Typ | Max | Unit | Note |
|---|---|---|---|---|---|---|---|
| Frequency | DCLK | $f_{CLK}$ | 67 | 74.25 | 78.00 | MHz | 1188/16 |
| | Horizontal | $f_H$ | 244 | 270 | 280 | KHz | 1 |
| | Vertical | $f_V$ | 95 | | 122 | Hz | 2 |

notes: 1. The input of HSYNC & VSYNC signal does not have an effect on normal operation (DE Only Mode). If you use spread spectrum of EMI, add some additional clock to minimum value for clock margin.

2. The performance of the electro-optical characteristics may be influenced by variance of the vertical refresh rate and the horizontal frequency

3. Spread Spectrum Rate (SSR) is limited to ±0.5% center spread at 30KHz

※ Timing should be set based on clock frequency.



One step solution for LCD / PDP / OLED panel application: Datasheet, inventory and accessory! www.panelook.com

Global LCD Panel Exchange Center www.panelook.com 屏库:全球液晶屏交易中心



## 3-4. V by One input signal Characteristics

### 3-4-1. V by One Input Signal Timing Diagram

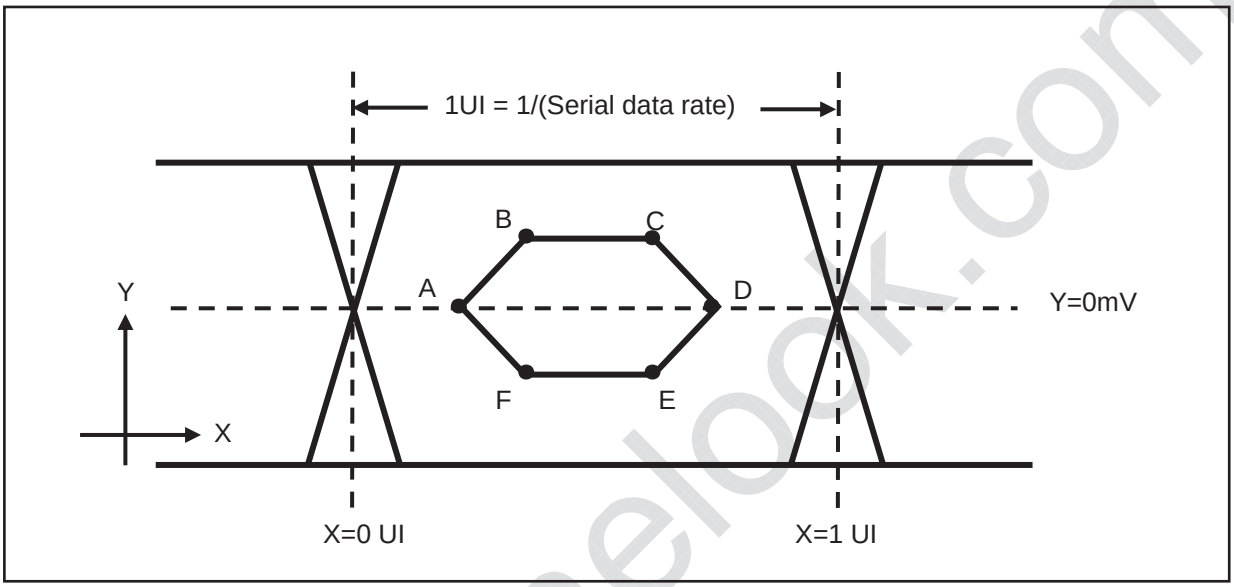


**Table7. Eye Mask Specification**

| | X[UI] | Note | Y[mV] | Note |
|---|---|---|---|---|
| A | 0.25 (max) | 2 | 0 | - |
| B | 0.3 (max) | 2 | 50 | 3 |
| C | 0.7(min) | 3 | 50 | 3 |
| D | 0.75(min) | 3 | 0 | - |
| E | 0.7(min) | 3 | I -50 I | 3 |
| F | 0.3(max) | 2 | I -50 I | 3 |

notes 1. All Input levels of V by One signals are based on the V by One HS Standard Ver. 1.4
2. This is allowable maximum value.
3. This is allowable minimum value.
4. The eye diagram is measured by the oscilloscope and receiver CDR characteristic must be emulated.
- PLL bandwidth : 15 Mhz (TBD)
- Damping Factor : 1.5



One step solution for LCD / PDP / OLED panel application: Datasheet, inventory and accessory! www.panelook.com

Global LCD Panel Exchange Center www.panelook.com 屏库:全球液晶屏交易中心



### 3-4-2. V by One Input Signal Characteristics

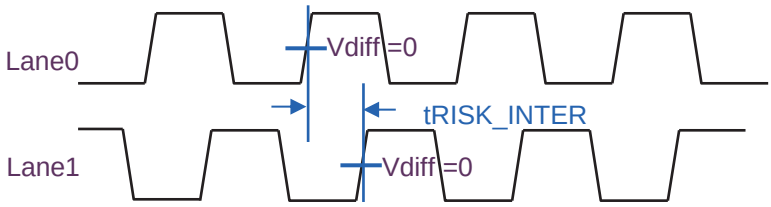


<Inter-pair Skew between two Lanes>

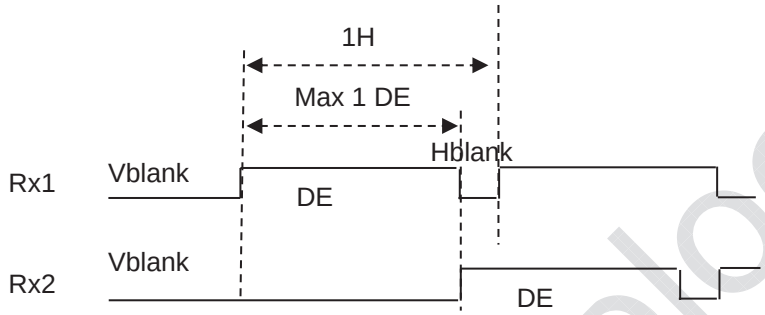


<Inter-pair Skew between two sub Blocks>

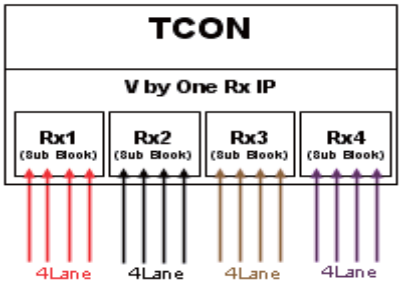


<TCON – VbyOne Brief Diagram >

| Description | Symbol | Min | Max | Unit | notes |
|---|---|---|---|---|---|
| Allowable inter-pair skew between lanes | tRISK_INTER | - | 5 | UI | 1,3 |
| Allowable iner-pair skew between sub-blocks | tRISK_BLOCK | - | 1 | DE | 1,4 |

Notes 1.1UI = 1/serial data rate

2. it is the time difference between the true and complementary single-ended signals.
3. it is the time difference of the differential voltage between any two lanes in one sub block.
4. it is the time difference of the differential voltage between any two blocks in one IP.



One step solution for LCD / PDP / OLED panel application: Datasheet, inventory and accessory! www.panelook.com

Global LCD Panel Exchange Center www.panelook.com 屏库:全球液晶屏交易中心



### 3-5. Color Data Reference

The brightness of each primary color (red, green, blue) is based on the 10bit or 8bit gray scale data input for the color. The higher binary input, the brighter the color. Table 8 provides a reference for color versus data input.

**Table 8. COLOR DATA REFERENCE**

| Packer input & Unpacker output | | 30bpp RGB (10bit) | 24bpp RGB (8bit) |
|---|---|---|---|
| Byte0 | D[0] | R[2] | R[0] |
| | D[1] | R[3] | R[1] |
| | D[2] | R[4] | R[2] |
| | D[3] | R[5] | R[3] |
| | D[4] | R[6] | R[4] |
| | D[5] | R[7] | R[5] |
| | D[6] | R[8] | R[6] |
| | D[7] | R[9] | R[7] |
| Byte1 | D[8] | G[2] | G[0] |
| | D[9] | G[3] | G[1] |
| | D[10] | G[4] | G[2] |
| | D[11] | G[5] | G[3] |
| | D[12] | G[6] | G[4] |
| | D[13] | G[7] | G[5] |
| | D[14] | G[8] | G[6] |
| | D[15] | G[9] | G[7] |
| Byte2 | D[16] | B[2] | B[0] |
| | D[17] | B[3] | B[1] |
| | D[18] | B[4] | B[2] |
| | D[19] | B[5] | B[3] |
| | D[20] | B[6] | B[4] |
| | D[21] | B[7] | B[5] |
| | D[22] | B[8] | B[6] |
| | D[23] | B[9] | B[7] |
| Byte3 | D[24] | Don't care | |
| | D[25] | Don't care | |
| | D[26] | B[0] | |
| | D[27] | B[1] | |
| | D[28] | G[0] | |
| | D[29] | G[1] | |
| | D[30] | R[0] | |
| | D[31] | R[1] | |

Notes 1. 30bpp RGB (10bit) is 4 byte mode, otherwise (24bpp RGB) 3byte mode



One step solution for LCD / PDP / OLED panel application: Datasheet, inventory and accessory! www.panelook.com

Global LCD Panel Exchange Center www.panelook.com 屏库:全球液晶屏交易中心



## 3-6. Power Sequence

### 3-6-1. LCD Driving circuit

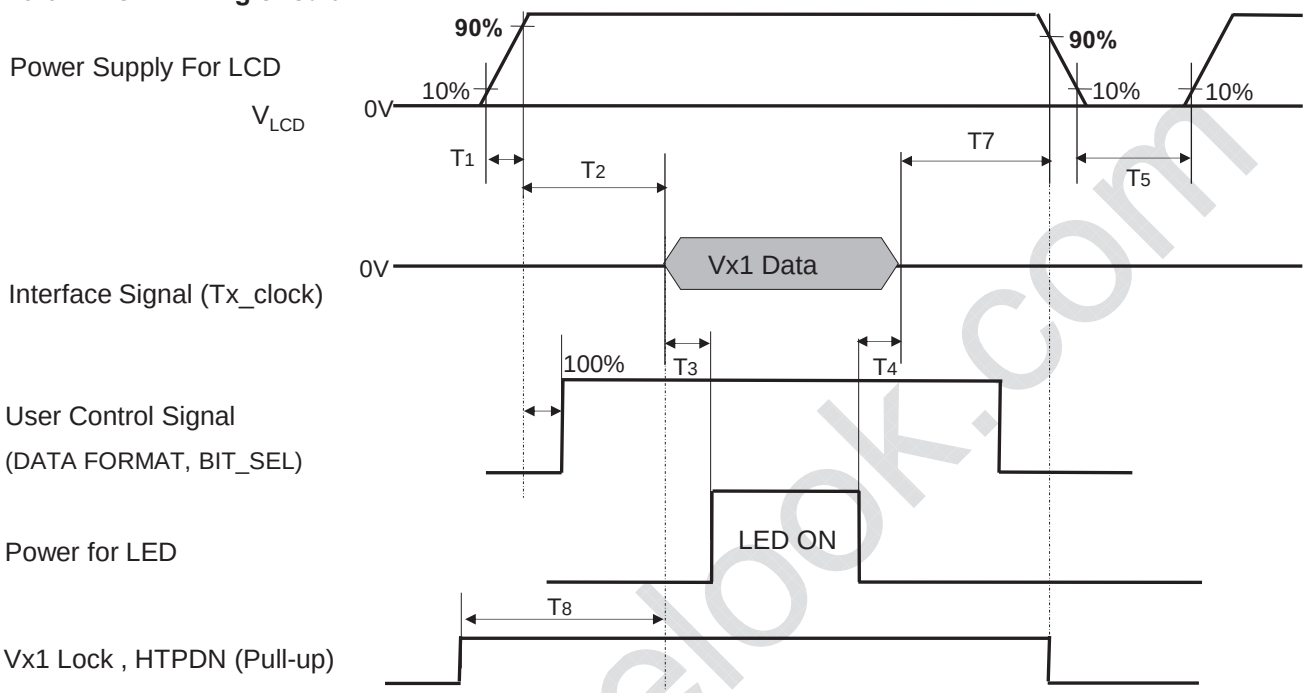


| Parameter | Value | | | Unit | Note |
|---|---|---|---|---|---|
| | Min | Typ | Max | | |
| **T1** | 0.5 | - | 20 | ms | 1 |
| **T2** | 200 | - | - | ms | 2 |
| **T3** | 800 | - | - | ms | 3 |
| **T4** | 100 | - | - | ms | 3 |
| **T5** | 1.0 | - | - | s | 4 |
| **T6** | 0 | - | T2 | ms | 5 |
| **T7** | 0 | - | - | ms | 6 |
| **T8** | 0 | - | - | ms | |

Note :

1. Even though T1 is over the specified value, there is no problem if I2T spec of fuse is satisfied.
2. If T2 is satisfied with specification after removing LVDS Cable, there is no problem.
3. The T3 / T4 is recommended value, the case when failed to meet a minimum specification, abnormal display would be shown. There is no reliability problem.
4. T5 should be measured after the Module has been fully discharged between power off and on period.
5. If the on time of signals (Interface signal and user control signals) precedes the on time of Power ($V_{LCD}$), it will be happened abnormal display. When T6 is NC status, T6 doesn't need to be measured.
6. It is recommendation specification that T7 has to be 0ms as a minimum value.

※ Please avoid floating state of interface signal at invalid period.
※ When the power supply for LCD (VLCD) is off, be sure to pull down the valid and invalid data to 0V.



One step solution for LCD / PDP / OLED panel application: Datasheet, inventory and accessory! www.panelook.com

Global LCD Panel Exchange Center www.panelook.com 屏库:全球液晶屏交易中心



### 3-6-2. Sequence for LED Driver

Power Supply For LED Driver

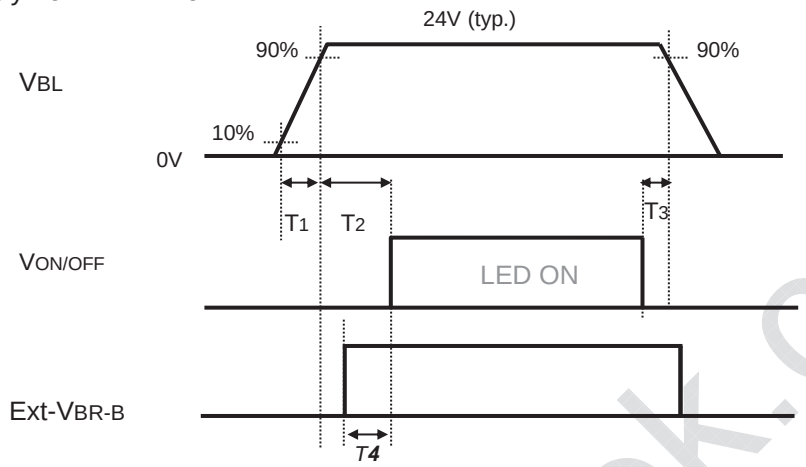


### 3-6-3. Dip condition for LED Driver

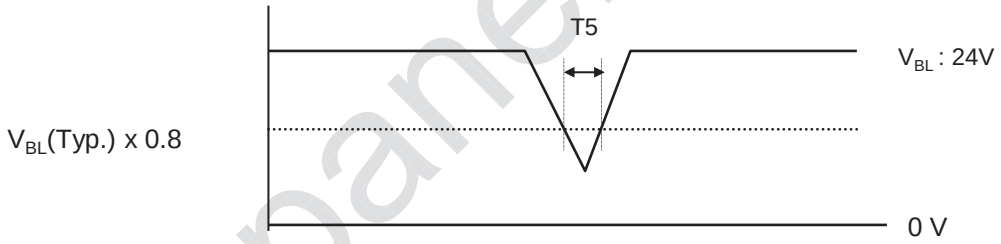


**Table 10. Power Sequence for LED Driver**

| Parameter | Values | | | Units | Remarks |
|---|---|---|---|---|---|
| | Min | Typ | Max | | |
| T1 | 20 | - | - | ms | 1 |
| T2 | 500 | - | - | ms | |
| T3 | 10 | | - | ms | |
| T4 | 0 | - | - | ms | |
| T5 | - | - | 10 | ms | $V_{BL}$(Typ) x 0.8 |

notes : 1. T1 describes rising time of 0V to 24V and this parameter does not applied at restarting time.
Even though T1 is over the specified value, there is no problem if $I^2T$ spec of fuse is satisfied.



One step solution for LCD / PDP / OLED panel application: Datasheet, inventory and accessory! www.panelook.com

Global LCD Panel Exchange Center www.panelook.com 屏库:全球液晶屏交易中心



## 4. Optical Specification

Optical characteristics are determined after the unit has been 'ON' and stable in a dark environment at 25±2°C. The values are specified at distance 50cm from the LCD surface at a viewing angle of Φ and θ equal to 0 °. FIG. 1 shows additional information concerning the measurement equipment and method.

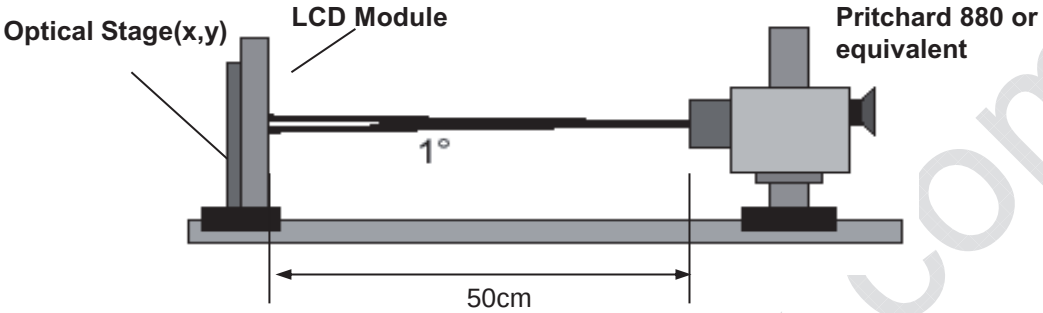


**FIG. 1 Optical Characteristic Measurement Equipment and Method**

Ta= 25±2°C, $V_{LCD}$=12.0V, fv=120Hz, Dclk=74.25MHz, **EXTV**BR-B =100%

**Table 11. OPTICAL CHARACTERISTICS**

| Parameter | | Symbol | | Value Min | Value Typ | Value Max | Unit | notes |
|---|---|---|---|---|---|---|---|---|
| Contrast Ratio | | CR | | 900 | 1200 | - | | 1 |
| Surface Luminance, white | | $L_{WH}$ | - | 400 | 500 | | cd/m² | 2 |
| Luminance Variation | | $\delta_{WHITE}$ | 9P | 60 | | | % | 3 |
| Response Time | Gray-to-Gray | G to G | | - | 8 | 12 | ms | 4 |
| | Uniformity | $\delta_{G\ TO\ G}$ | | - | - | 1 | | 5 |
| Color Coordinates [CIE1931] | RED | Rx | | Typ -0.03 | 0.640 | Typ +0.03 | | |
| | | Ry | | | 0.336 | | | |
| | GREEN | Gx | | | 0.307 | | | |
| | | Gy | | | 0.604 | | | |
| | BLUE | Bx | | | 0.154 | | | |
| | | By | | | 0.057 | | | |
| | WHITE | Wx | | | 0.279 | | | |
| | | Wy | | | 0.292 | | | |
| Color Temperature | | | | | 10,000 | | K | |
| Color Gamut (NTSC) | | | | | 72 | | % | |
| Viewing Angle (CR>10) | | | | | | | | |
| | x axis, right(ϕ=0°) | θr (x axis) | | 89 | - | - | degree | 6 |
| | x axis, left (ϕ=180°) | θl (x axis) | | 89 | - | - | | |
| | y axis, up (ϕ=90°) | θu (y axis) | | 89 | - | - | | |
| | y axis, down (ϕ=270°) | θd (y axis) | | 89 | - | - | | |
| Gray Scale | | | | - | - | - | | 7 |



One step solution for LCD / PDP / OLED panel application: Datasheet, inventory and accessory! www.panelook.com

Global LCD Panel Exchange Center www.panelook.com 屏库:全球液晶屏交易中心



notes : 1. Contrast Ratio(CR) is defined mathematically as :

$$\text{Contrast Ratio} = \frac{\text{Surface Luminance with all white pixels}}{\text{Surface Luminance with all black pixels}}$$

It is measured at center 1-point.

2. Surface luminance is determined after the unit has been 'ON' and 1 Hour after lighting the backlight in a dark environment at 25±2°C. Surface luminance is the luminance value at center 1-point across the LCD surface 50cm from the surface with all pixels displaying white. For more information see the FIG. 2
3. The variation in surface luminance , δ WHITE is defined as :
   δ WHITE(9P) = Minimum (Lon1,Lon2~ Lon8, Lon9) / Maximum (Lon1,Lon2~ Lon8, Lon9)*100
   Where Lon1 to Lon9 are the luminance with all pixels displaying white at 9 locations
4. Response time is the time required for the display to transit from G(N) to G(M) (Rise Time, TrR) and from G(M) to G(N) (Decay Time, TrD). For additional information see the FIG. 3. (N<M)
   ※ G to G Spec stands for average value of all measured points.
   Photo Detector : RD-80S / Field : 2°
5. MPRT is defined as the 10% to 90% blur-edge width Bij(pixels) and scroll speed U(pixels/frame)at the moving picture. For more information, see FIG 4

※. Gray to Gray / MPRT Response time uniformity is Reference data. Appendix VI-1/ VI-2

6. Viewing angle is the angle at which the contrast ratio is greater than 10. The angles are determined for the horizontal or x axis and the vertical or y axis with respect to the z axis which is normal to the LCD module surface. For more information, see the FIG. 5.
7. Gray scale specification
   Gamma Value is approximately 2.2. For more information, see the Table 12.

**Table 12. GRAY SCALE SPECIFICATION**

| Gray Level | Luminance [%] (Typ) |
|---|---|
| L0 | 0.45 |
| L63 | 0.27 |
| L127 | 1.04 |
| L191 | 2.49 |
| L255 | 4.68 |
| L319 | 7.66 |
| L383 | 11.5 |
| L447 | 16.1 |
| L511 | 21.6 |
| L575 | 28.1 |
| L639 | 35.4 |
| L703 | 43.7 |
| L767 | 53.0 |
| L831 | 63.2 |
| L895 | 74.5 |
| L959 | 86.7 |
| L1023 | 100 |



One step solution for LCD / PDP / OLED panel application: Datasheet, inventory and accessory! www.panelook.com

Global LCD Panel Exchange Center www.panelook.com 屏库:全球液晶屏交易中心



Measuring point for surface luminance & measuring point for luminance variation.

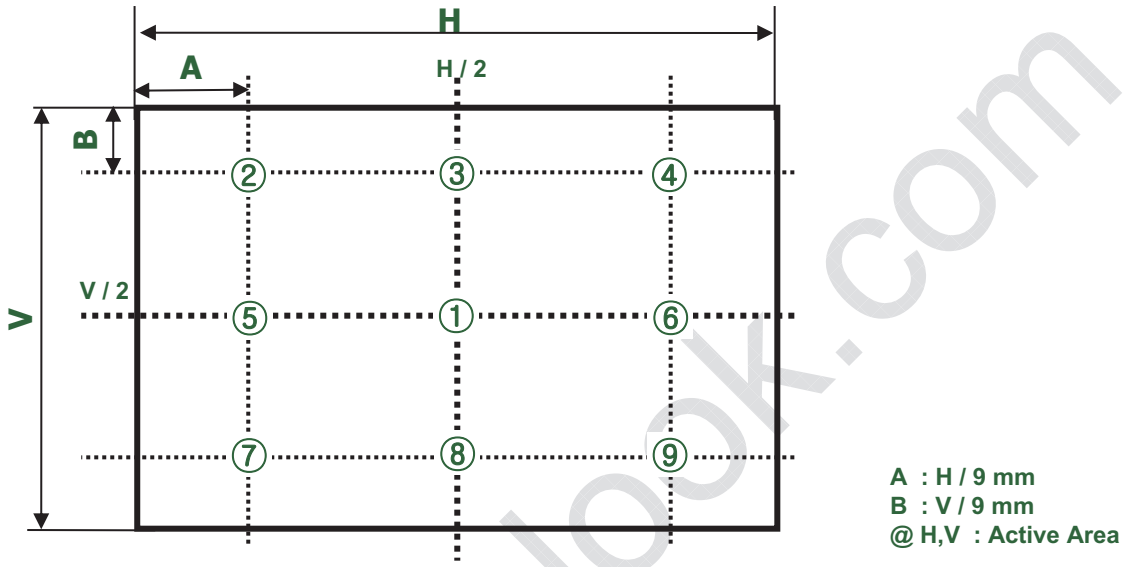


**FIG. 2 9 Points for Luminance Measure**

Response time is defined as the following figure and shall be measured by switching the input signal for "Gray(N)" and "Gray(M)".

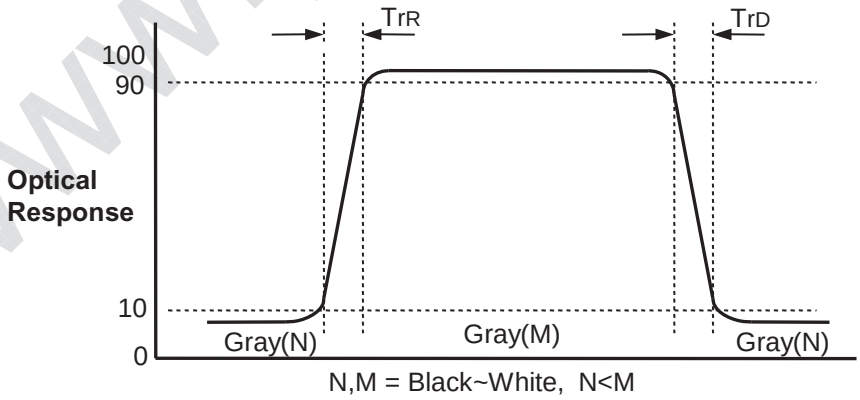


**FIG. 3 Response Time**



One step solution for LCD / PDP / OLED panel application: Datasheet, inventory and accessory! www.panelook.com

Global LCD Panel Exchange Center www.panelook.com 屏库:全球液晶屏交易中心



## 5. Mechanical Characteristics

Table 13 provides general mechanical characteristics.

**Table 13. MECHANICAL CHARACTERISTICS**

| Item | Value | |
|---|---|---|
| Outline Dimension | Horizontal | 1922.2 mm |
| | Vertical | 1093.2 mm |
| | | 13.6 mm |
| Bezel Area | Horizontal | 1897.0 mm |
| | Vertical | 1068.0 mm |
| Active Display Area | Horizontal | 1895.04 mm |
| | Vertical | 1065.96 mm |
| Weight | 34.1Kg (Typ.), 35.8Kg (Max.) | |
| Case Top | Material | EGI |
| | Case Top Color | Black |
| | LG Logo Color | None |
| | Ultra HD Logo Color | None |

notes : Please refer to a mechanical drawing in terms of tolerance at the next page.



One step solution for LCD / PDP / OLED panel application: Datasheet, inventory and accessory! www.panelook.com

## [ FRONT VIEW ]

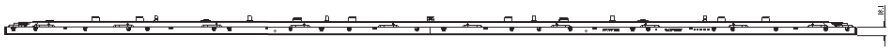

**SET : TOP**

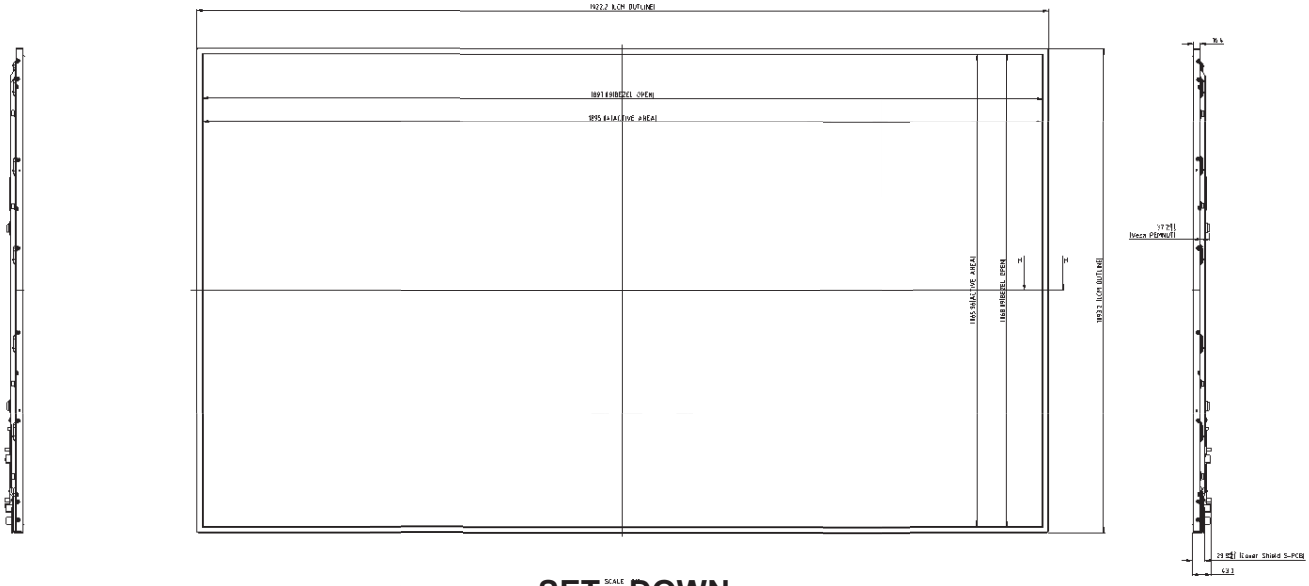

**SET : DOWN**

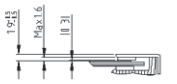

SECTION H-H

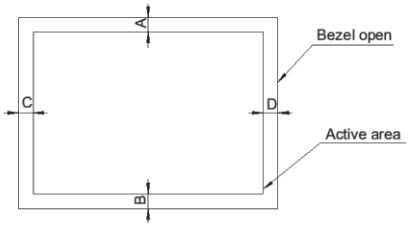


| Date | Version |
|---|---|
| | |
| | |
| | |
| | |



One step solution for LCD / PDP / OLED panel application: Datasheet, inventory and accessory! www.panelook.com

Global LCD Panel Exchange Center www.panelook.com 屏库:全球液晶屏交易中心



## [ REAR VIEW ]

### SET : TOP

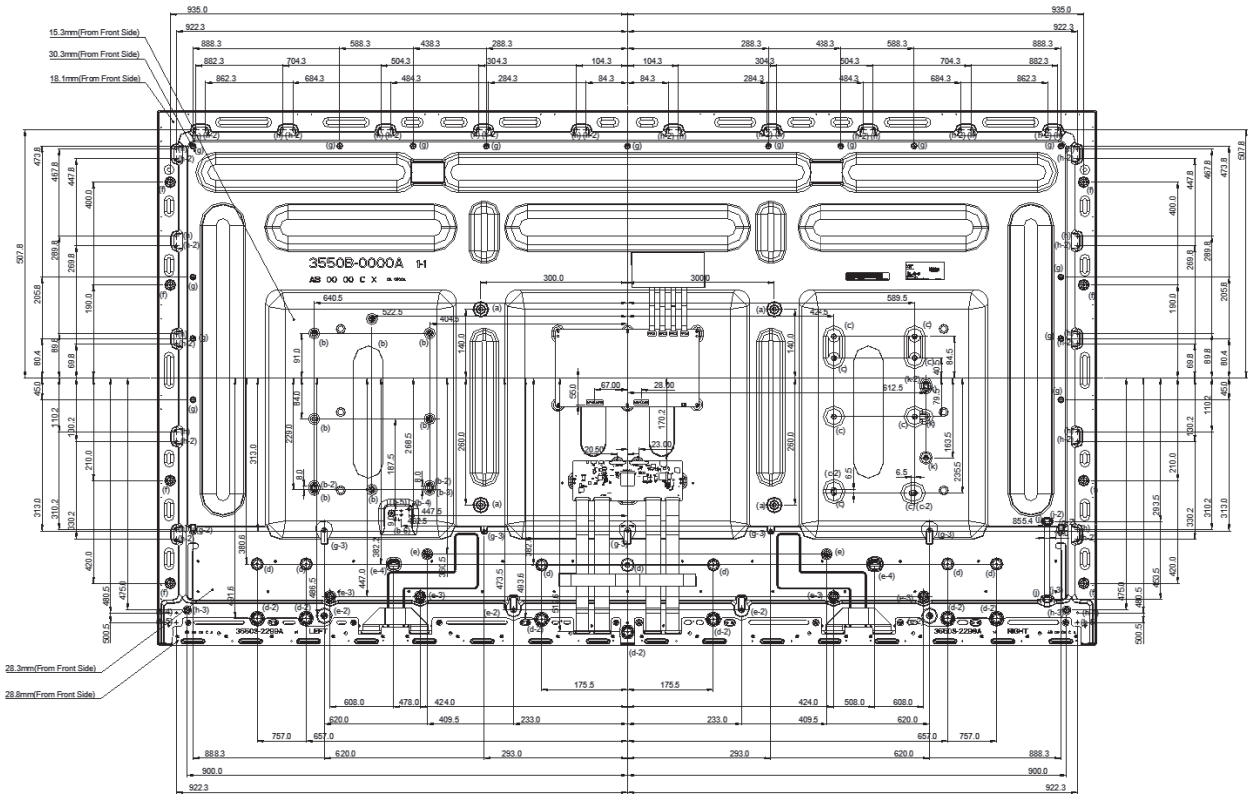


### SET : DOWN

| ITEM | UDM Height (mm) | Type | Max Depth (mm) | Max Torque (Kgf.com) | Notes |
|---|---|---|---|---|---|
| (a) | 9.1 | M8 | | | VESA |
| (b) | 4.5 | M3 | | | PSU |
| (b-2) | 2.0 | n 4 | | | PSU |
| (b-3) | 4.5 | M4 | | | PSU |
| (b-4) | 9.0 | M3 | | | PSU Cable |
| (b-5) | 2.0 | n 4 | | | PSU Cable |
| (b-6) | 6.9 | M3 | | | PSU Cable |
| (c) | 9.8 | M3 | | | Main Board |
| (c-2) | 2.0 | n 4.2 | | | Main Board |
| (d) | 13.5 | M3 | | | Stand |
| (d-2) | 16.8 | M3 | | | Stand |
| (e) | 15.0 | M3 | | | Speaker |
| (e-2) | 19.8 | M3 | | | Speaker |
| (e-3) | 3.0 | n 8.0 | | | Speaker |
| (e-4) | 4.0 | - | | | Speaker |
| (f) | 9.0 | M4 | | | Handle |
| (g) | 1.0 | M3 | | | Back Cover_1 |
| (g-2) | 3.0 | M3 | | | Back Cover_1 |
| (g-3) | 8.0 | M3 | | | Back Cover_1 |
| (h) | 5.4 | M3 | | | Back Cover_2 |
| (h-2) | 2.0 | n 4.0 | | | Back Cover_2 |
| (h-3) | 3.0 | M3 | | | Back Cover_2 |
| (h-4) | 2.0 | n 4.0 | | | Back Cover_2 |
| (h-5) | - | M3 | | | Back Cover_2 |
| (j) | 2.0 | n 4.0 | | | Local Key |
| (j-2) | 2.0 | M3 | | | Local Key |
| (j-3) | 4.0 | M3 | | | Local Key |
| (k) | 4.7 | M3 | | | AV Bracket |
| (k-2) | 4.7 | n 4.5 | | | AV Bracket |
| | | | | | |



One step solution for LCD / PDP / OLED panel application: Datasheet, inventory and accessory! www.panelook.com

Global LCD Panel Exchange Center www.panelook.com 屏库:全球液晶屏交易中心



## 6. Reliability

**Table 14. ENVIRONMENT TEST CONDITION**

| No. | Test Item | Condition |
|---|---|---|
| 1 | High temperature storage test | Ta= 60˚C 90% 240h |
| 2 | Low temperature storage test | Ta= -20˚C 240h |
| 3 | | Ta= 50˚C 50%RH 500h |
| 4 | Low temperature operation test | Ta= 0˚C 500h |
| 5 | Humidity condition Operation | Ta= 40 ˚C ,90%RH |
| 6 | Altitude operating<br>storage / shipment | 0 - 16,400 ft<br>0 - 40,000 ft |

Note : 1. Before and after Reliability test, LCM should be operated with normal function.

www.panelook.com



One step solution for LCD / PDP / OLED panel application: Datasheet, inventory and accessory! www.panelook.com

Global LCD Panel Exchange Center www.panelook.com 屏库:全球液晶屏交易中心



# 7. International Standards

## 7-1. Safety

a) UL 60065, Underwriters Laboratories Inc.
Audio, Video and Similar Electronic Apparatus - Safety Requirements.

b) CAN/CSA C22.2 No.60065:03, Canadian Standards Association.
Audio, Video and Similar Electronic Apparatus - Safety Requirements.

c) EN 60065, European Committee for Electrotechnical Standardization (CENELEC).
Audio, Video and Similar Electronic Apparatus - Safety Requirements.

d) IEC 60065, The International Electrotechnical Commission (IEC).
Audio, Video and Similar Electronic Apparatus - Safety Requirements.

## 7-2. Environment

a) RoHS, Directive 2011/65/EU of the European Parliament and of the council of 8 June 2011

www.panelook.com



One step solution for LCD / PDP / OLED panel application: Datasheet, inventory and accessory! www.panelook.com

Global LCD Panel Exchange Center www.panelook.com 屏库:全球液晶屏交易中心



# 8. Packing

## 8-1. Information of LCM Label

a) Lot Mark

| A | B | C | D | E | F | G | H | I | J | K | L | M |
|---|---|---|---|---|---|---|---|---|---|---|---|---|

A,B,C : SIZE(INCH)
E : MONTH
D : YEAR
F ~ M : SERIAL NO.

Note

1. YEAR

| Year | 2011 | 2012 | 2013 | 2014 | 2015 | 2016 | | 2018 | 2019 | 2020 |
|---|---|---|---|---|---|---|---|---|---|---|
| Mark | A | B | C | D | E | F | G | H | J | K |

2. MONTH

| Month | Jan | Feb | Mar | Apr | May | Jun | Jul | Aug | Sep | Oct | Nov | Dec |
|---|---|---|---|---|---|---|---|---|---|---|---|---|
| Mark | 1 | 2 | 3 | 4 | 5 | 6 | 7 | 8 | 9 | A | B | C |

b) Location of Lot Mark

Serial NO. is printed on the label. The label is attached to the backside of the LCD module.
This is subject to change without prior notice.

## 8-2. Packing Form

a) Package quantity in one Pallet : 6 pcs

b) Pallet Size : 2280 mm(W) X 780 mm(D) X 1420 mm(H)



One step solution for LCD / PDP / OLED panel application: Datasheet, inventory and accessory! www.panelook.com

Global LCD Panel Exchange Center www.panelook.com 屏库:全球液晶屏交易中心



## 9. Precautions

Please pay attention to the followings when you use this TFT LCD module.

### 9-1. Mounting Precautions

(1) You must mount a module using specified mounting holes (Details refer to the drawings).
(2) You should consider the mounting structure so that uneven force (ex. Twisted stress, Concentrated stress) is not applied to the module. And the case on which a module is mounted should have sufficient strength so that external force is not transmitted directly to the module.
(3) Please attach the surface transparent protective plate to the surface in order to protect the polarizer. Transparent protective plate should have sufficient strength in order to the resist external force.
(4) You should adopt radiation structure to satisfy the temperature specification.
(5) Acetic acid type and chlorine type materials for the cover case are not desirable because the former generates corrosive gas of attacking the polarizer at high temperature and the latter causes circuit break by electro-chemical reaction.
(6) Do not touch, push or rub the exposed polarizers with glass, tweezers or anything harder than HB pencil lead. And please do not rub with dust clothes with chemical treatment.
Do not touch the surface of polarizer for bare hand or greasy cloth.(Some cosmetics are detrimental to the polarizer.)
(7) When the surface becomes dusty, please wipe gently with absorbent cotton or other soft materials like chamois soaks with petroleum benzine. Normal-hexane is recommended for cleaning the adhesives used to attach front / rear polarizers. Do not use acetone, toluene and alcohol because they cause chemical damage to the polarizer
(8) Wipe off saliva or water drops as soon as possible. Their long time contact with polarizer causes deformations and color fading.
(9) Do not open the case because inside circuits do not have sufficient strength.
(10) Touching the LED Driver might cause an electric shock and damage to LED Driver. Please always use antistatic tools when handling the LED Driver

### 9-2. Operating Precautions

(1) Response time depends on the temperature.(In lower temperature, it becomes longer.)
(2) Brightness depends on the temperature. (In lower temperature, it becomes lower.)
And in lower temperature, response time(required time that brightness is stable after turned on) becomes longer
(3) Be careful for condensation at sudden temperature change.Condensation makes damage to polarizer or

(4) When fixed patterns are displayed for a long time, remnant image is likely to occur.
(5) Module has high frequency circuits. Sufficient suppression to the electromagnetic interference shall be done by system manufacturers. Grounding and shielding methods may be important to minimized the interference.
(6) Please do not give any mechanical and/or acoustical impact to LCM. Otherwise, LCM can't be operated its full characteristics perfectly.
(7) A screw which is fastened up the steels should be a machine screw.
(if not, it can causes conductive particles and deal LCM a fatal blow)
(8) Please do not set LCD on its edge.
(9) The conductive material and signal cables are kept away from LED driver inductor to prevent abnormal display, sound noise and temperature rising.



One step solution for LCD / PDP / OLED panel application: Datasheet, inventory and accessory! www.panelook.com

Global LCD Panel Exchange Center www.panelook.com 屏库:全球液晶屏交易中心



## 9-3. Electrostatic Discharge Control

Since a module is composed of electronic circuits, it is not strong to electrostatic discharge. Make certain that treatment persons are connected to ground through wrist band etc. And don't touch interface pin directly.

## 9-4. Precautions for Strong Light Exposure

Strong light exposure causes degradation of polarizer and color filter.

When storing modules as spares for a long time, the following precautions are necessary.

(1) Store them in a dark place. Do not expose the module to sunlight or fluorescent light. Keep the temperature between 5˚C and 35˚C at normal humidity.
(2) The polarizer surface should not come in contact with any other object.
It is recommended that they be stored in the container in which they were shipped.
(3) Storage condition is guaranteed under packing conditions.
(4) The phase transition of Liquid Crystal in the condition of the low or high storage temperature will be recovered when the LCD module returns to the normal condition.

## 9-6. Appropriate Condition for Commercial Display

- Generally large-sized LCD modules are designed for consumer applications (TV).
Accordingly, a long-term display like in Commercial Display application, can cause uneven display including image sticking. To optimize module's lifetime and function, several operating usages are required.

1. Normal operating condition
   - Temperature: 0 ~ 40℃
   - Operating Ambient Humidity : 10 ~ 90 %
   - Display pattern: dynamic pattern (Real display)
   Note) Long-term static display can cause image sticking.
2. Operating usages under abnormal condition
   a. Ambient condition
   - Well-ventilated place is recommended to set up Commercial Display system.
   b. Power and screen save
   - Periodical power-off or screen save is needed after long-term display.



One step solution for LCD / PDP / OLED panel application: Datasheet, inventory and accessory! www.panelook.com

Global LCD Panel Exchange Center www.panelook.com 屏库:全球液晶屏交易中心



3. Operating usages to protect against image sticking due to long-term static display
   a. Suitable operating time: under 18 hours a day.
   b. Static information display recommended to use with moving image.
      - Cycling display between 5 minutes' information(static) display and 10 seconds' moving image.
   c. Background and character (image) color change
      - Use different colors for background and character, respectively.
      - Change colors themselves periodically.
   d. Avoid combination of background and character with large different luminance.
   1) Abnormal condition just means conditions except normal condition.
   2) Black image or moving image is strongly recommended as a screen save.

4. Lifetime in this spec. is guaranteed only when Commercial Display is used according to operating usages.
5. Module should be turned counterclockwise based on front view when used in portrait mode.

www.panelook.com



One step solution for LCD / PDP / OLED panel application: Datasheet, inventory and accessory! www.panelook.com

Global LCD Panel Exchange Center www.panelook.com 屏库:全球液晶屏交易中心



# APPENDIX-I

## ■ Pallet Ass'y

**[PJ]**

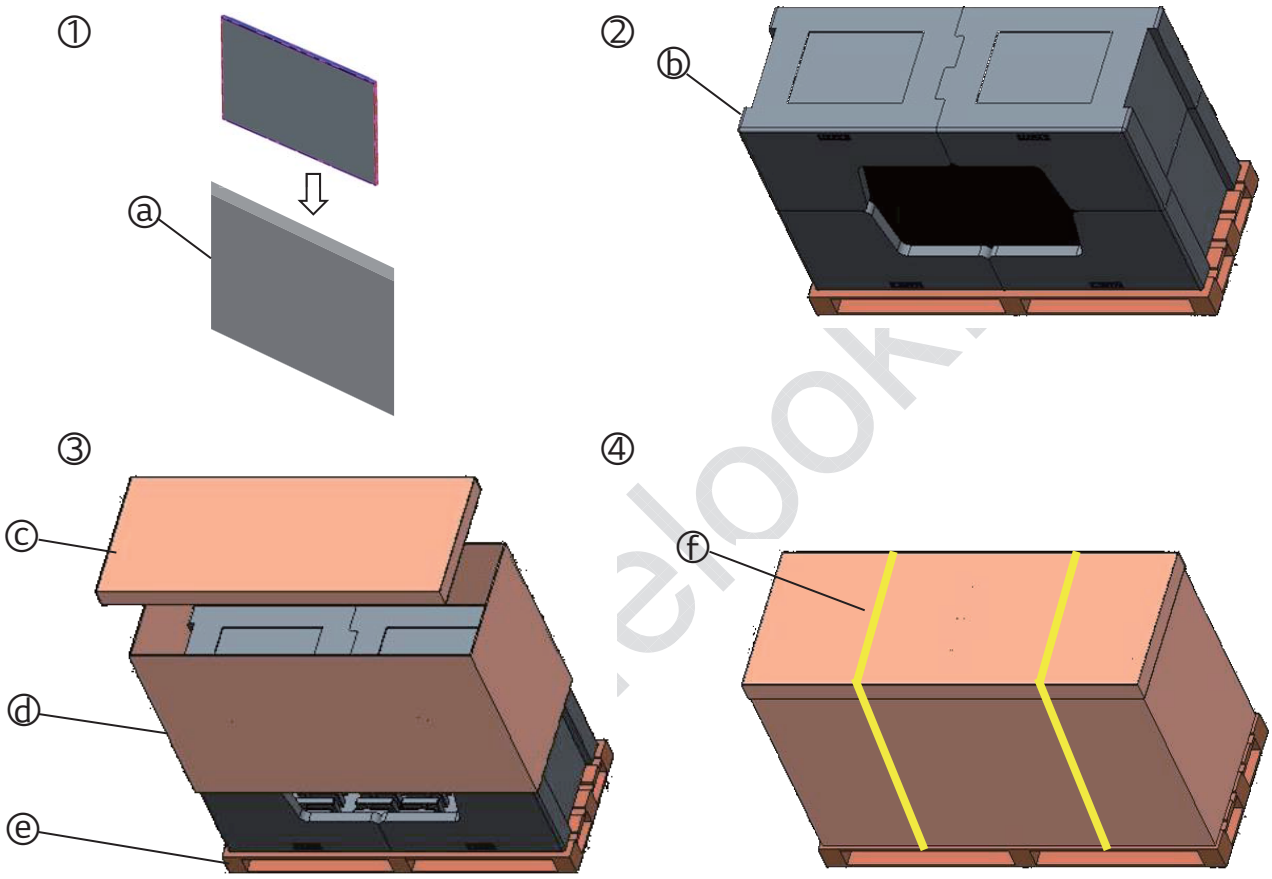


| No. | Description | Material |
|---|---|---|
| ⓐ | BAG | |
| ⓑ | Packing | EPS |
| ⓒ | Angle Cover | PAPER |
| ⓓ | Angle Packing | PAPER |
| ⓔ | Pallet | Plywood |
| ⓕ | Band | PP |



One step solution for LCD / PDP / OLED panel application: Datasheet, inventory and accessory! www.panelook.com

Global LCD Panel Exchange Center www.panelook.com 屏库:全球液晶屏交易中心



# APPENDIX- II-1

## ■ LCM Label

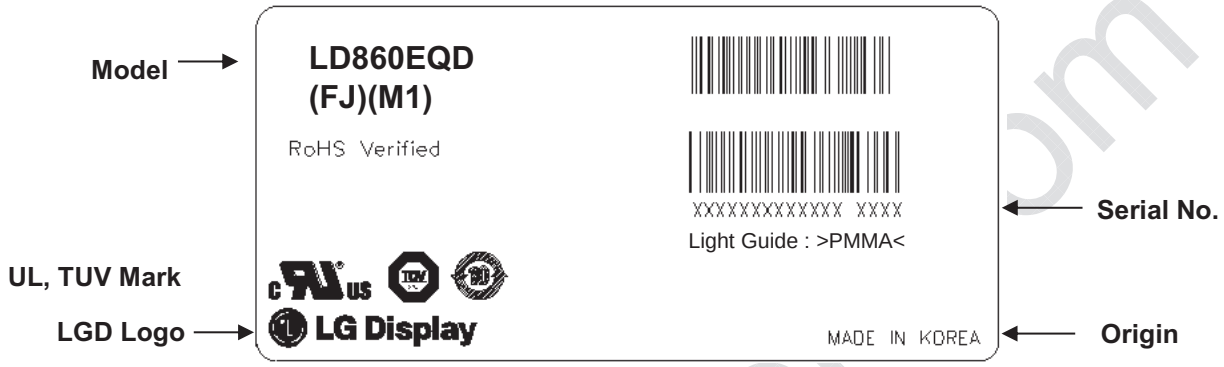


## ■ Production site

- LG Display (PJ, Heesung) Co., LTD

Note

1.The origin of LCM Label will be changed according to the production site.



One step solution for LCD / PDP / OLED panel application: Datasheet, inventory and accessory! www.panelook.com

Global LCD Panel Exchange Center www.panelook.com 屏库:全球液晶屏交易中心



# APPENDIX- II-2

■ Pallet Label

One step solution for LCD / PDP / OLED panel application: Datasheet, inventory and accessory! www.panelook.com

Global LCD Panel Exchange Center www.panelook.com 屏库:全球液晶屏交易中心



# # APPENDIX- III

■ Required signal assignment for Flat Link (Thine : THCV215) Transmitter

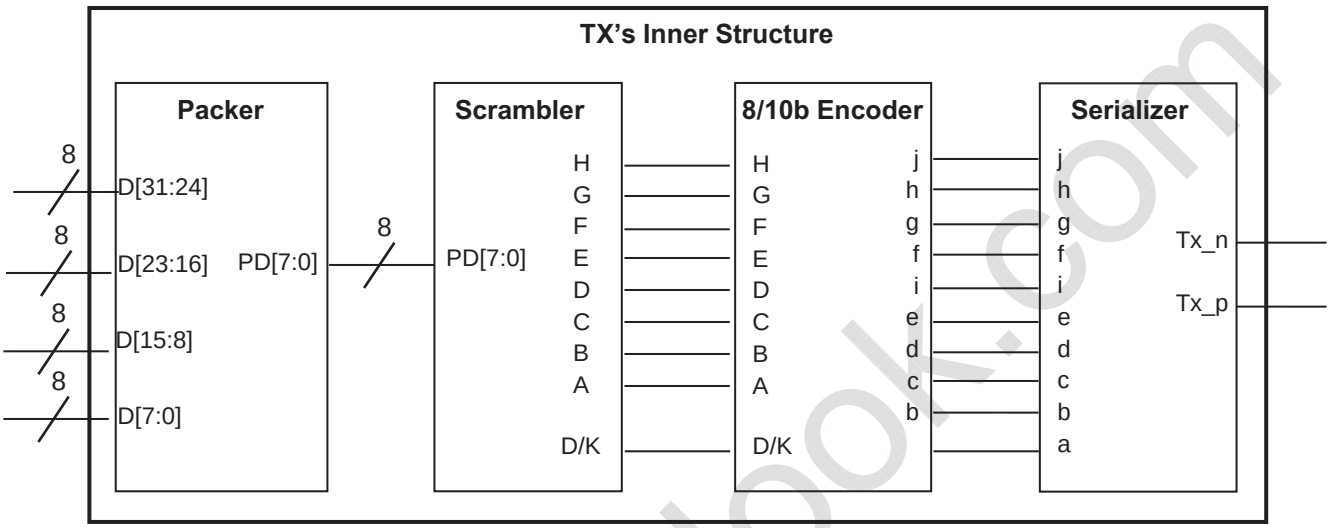


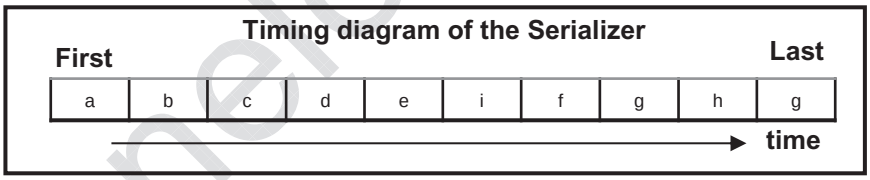


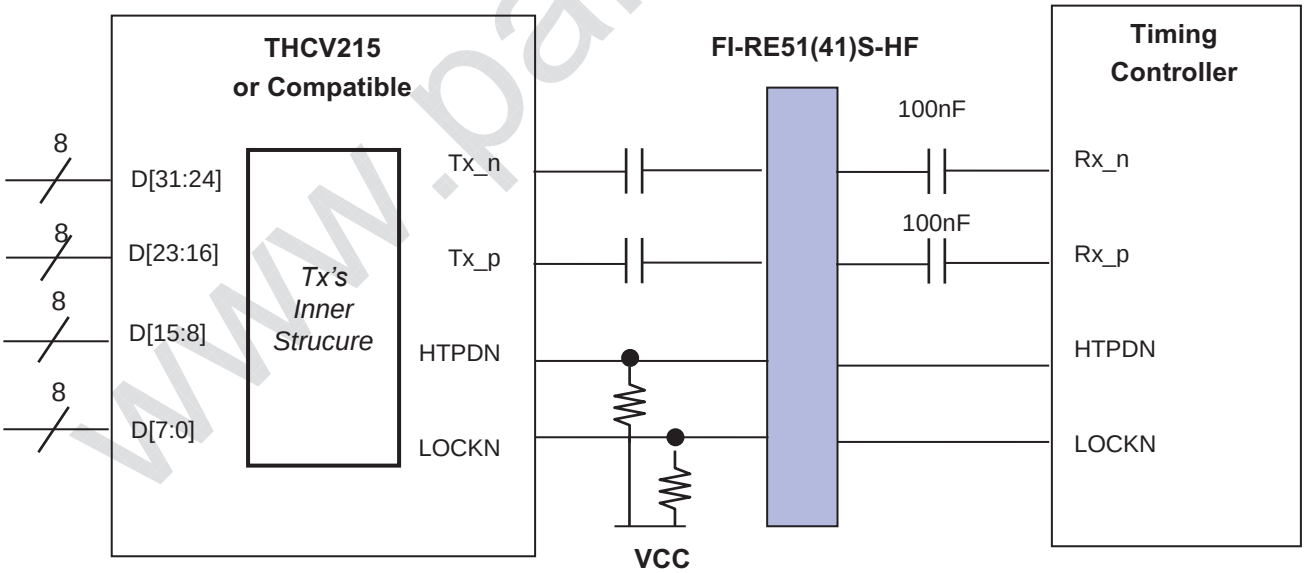


notes: 1. The LCD module uses a 100 nF capacitor on positive and negative lines of each receiver input.
2. Refer to Vx1 Transmitter Data Sheet for detail descriptions. (THCV215 or Compatible)
3. About Module connector pin configuration, Please refer to the Page 8~9.



One step solution for LCD / PDP / OLED panel application: Datasheet, inventory and accessory! www.panelook.com

Global LCD Panel Exchange Center www.panelook.com 屏库:全球液晶屏交易中心



# APPENDIX- IV-2

## ■ Option Pin Circuit Block Diagram

3) I2C(SDA/SCL) Selection pin

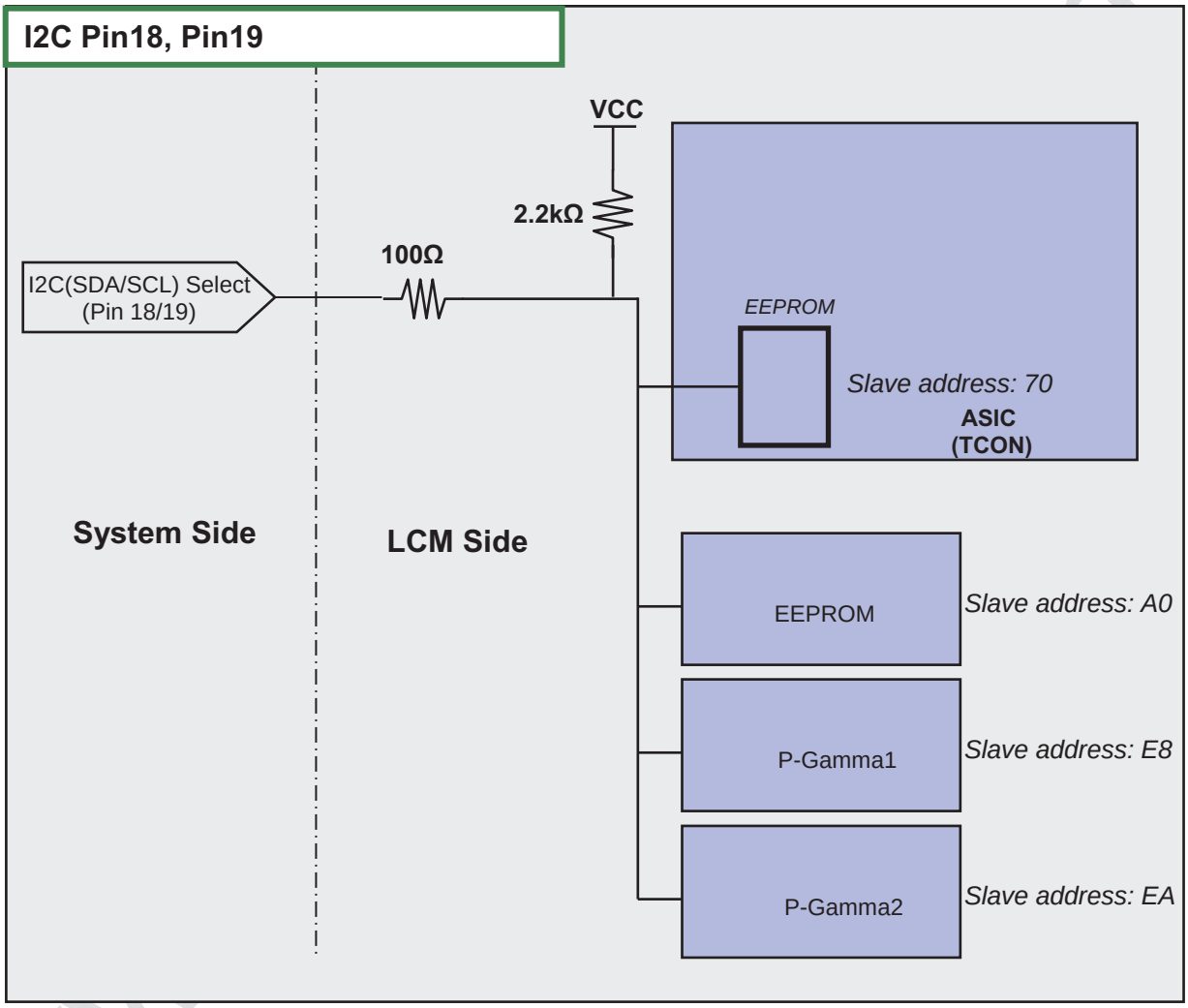


notes: 1. I2C Line of Set SoC avoid using slave address A0,E8,EA because LCD module uses those



One step solution for LCD / PDP / OLED panel application: Datasheet, inventory and accessory! www.panelook.com

Global LCD Panel Exchange Center www.panelook.com 屏库:全球液晶屏交易中心



# APPENDIX- IV-3

## ■ **Option Pin** Circuit Block Diagram

4) Circuit Block Diagram of Bit Selection pin

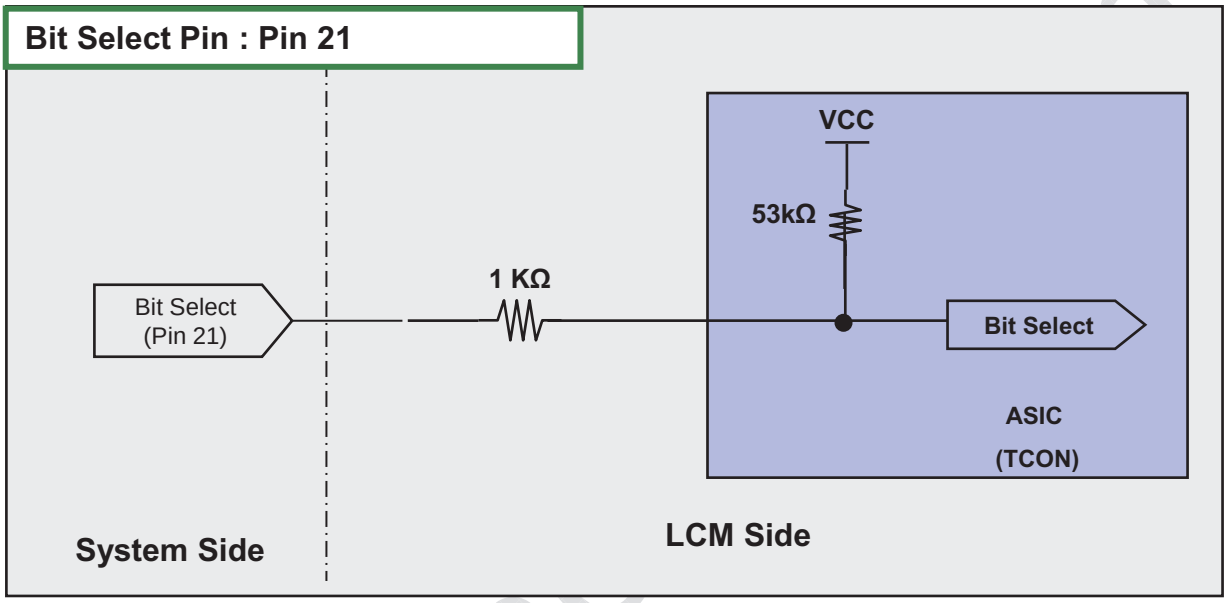


5) Circuit Block Diagram of L-Dim **Enable** Selection pin

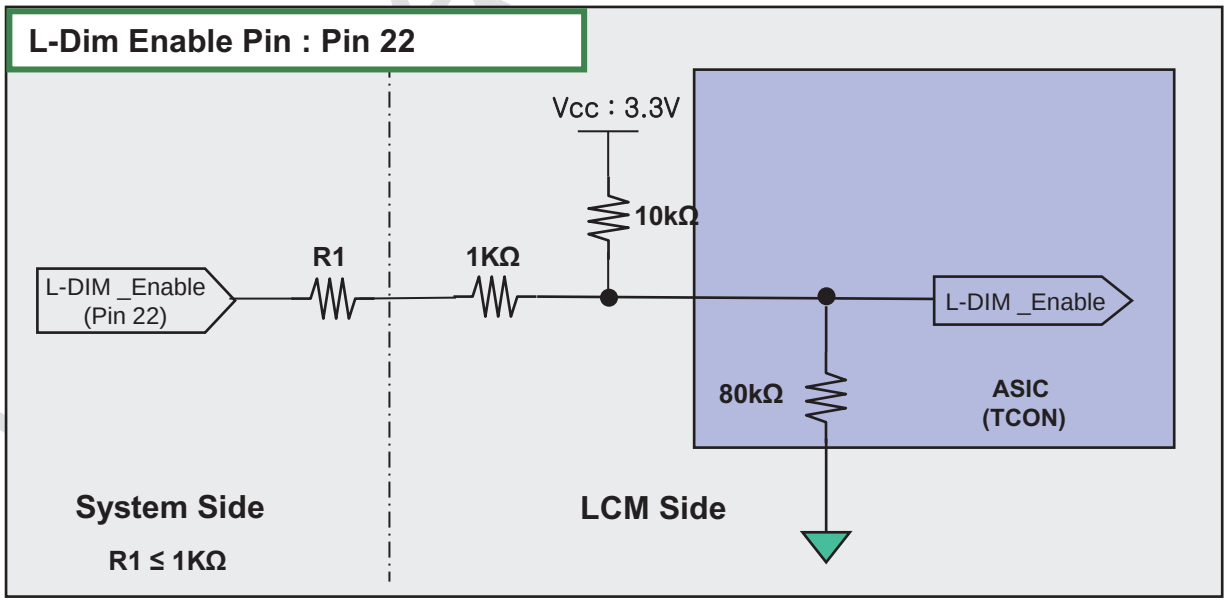




One step solution for LCD / PDP / OLED panel application: Datasheet, inventory and accessory! www.panelook.com

Global LCD Panel Exchange Center www.panelook.com 屏库:全球液晶屏交易中心



# APPENDIX- IV-4

## ■ Option Pin Circuit Block Diagram

6) Circuit Block Diagram of AGP Selection pin

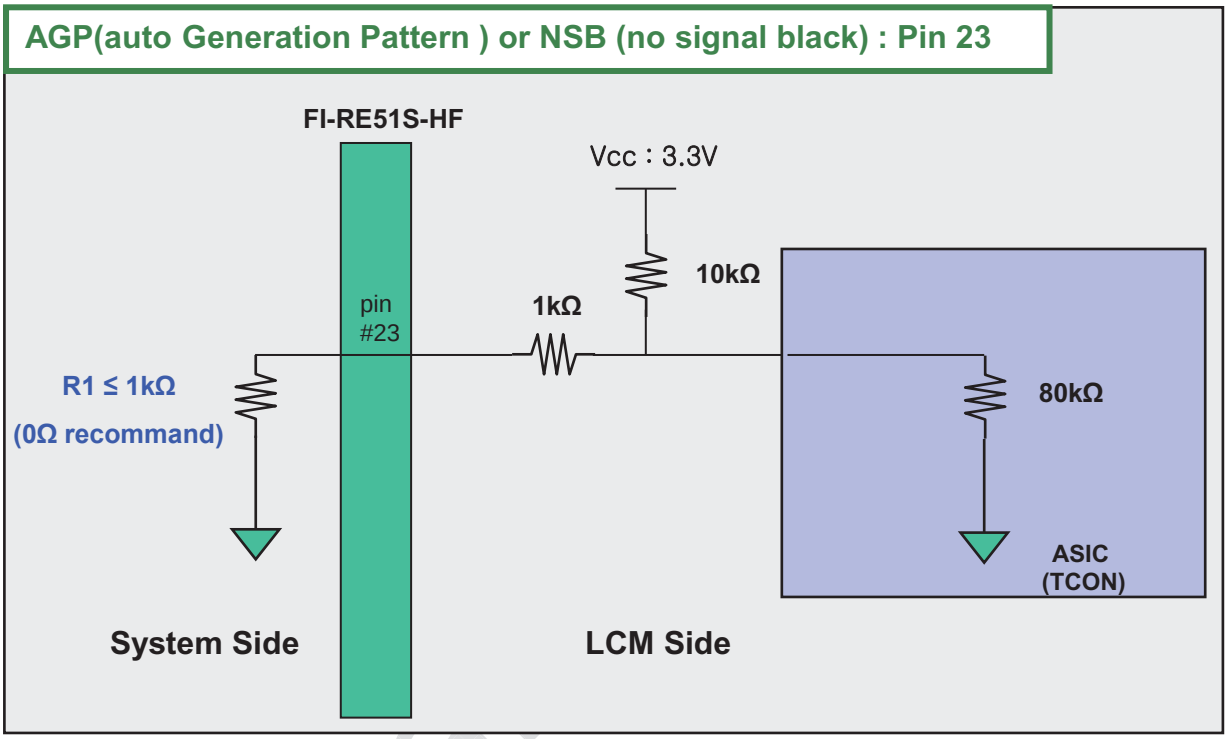


7) Circuit Block Diagram of HTPDN/ LOCKN Selection pin

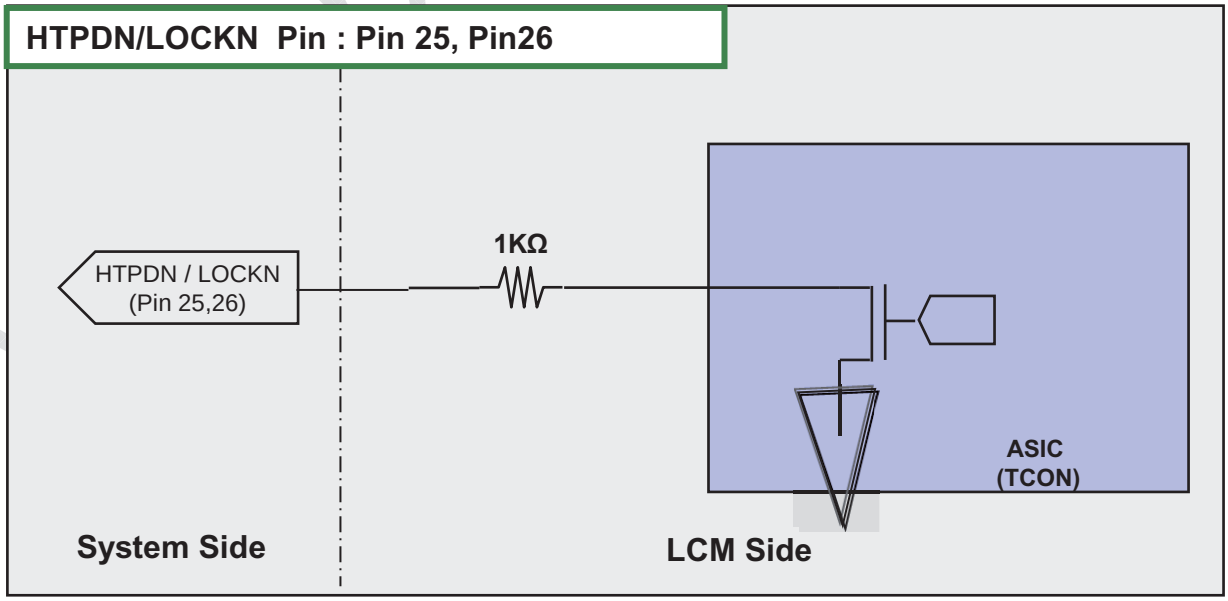




One step solution for LCD / PDP / OLED panel application: Datasheet, inventory and accessory! www.panelook.com

Global LCD Panel Exchange Center www.panelook.com 屏库:全球液晶屏交易中心



## # APPENDIX- VIII-1

# Gray to Gray Response Time Uniformity

This is only the reference data of G to G and uniformity for LD860EQD-FJM1 model.

1. G to G Response Time :
   Response time is defined as Figure3 and shall be measured by switching the input signal for "Gray (N) " and "Gray(M)".(32Gray Step at 8bit)

2. G to G Uniformity
   The variation of G to G Uniformity , $\delta_{G\ to\ G}$ is defined as :

$$\text{G to G Uniformity} = \frac{Maximum(GtoG) - Typical(GtoG)}{Typical(GtoG)} \leq 1$$

*Maximum (G to G) means maximum value of measured time (N, M = 0 (Black) ~ 1023(White), 128 gray step).

| | 0Gray | 127ray | 255Gray | ... | 895Gray | 1023Gray |
|---|---|---|---|---|---|---|
| 0Gray | | TrR:0G→127G | TrR:0G→255G | ... | TrR:0G→895G | TrR:0G→1023G |
| 127Gray | TrD:127G→0G | | TrR:127G→255G | ... | TrR:127G→895G | TrR:127G→1023G |
| 255Gray | TrD:255G→0G | TrD:255G→127G | | ... | TrR:255G→895G | TrR:255G→1023G |
| ... | ... | ... | ... | | ... | ... |
| 895Gray | TrD:895G→0G | TrD:895G→127G | TrD:895G→255G | ... | | TrR:895G→1023G |
| 1023Gray | TrD:1023G→0G | TrD:1023G→127G | TrD:1023G→255G | ... | TrD:1023G→895G | |

3. Sampling Size : 2 pcs

4. Measurement Method : Follow the same rule as optical characteristics measurement.

5. Current Status

   Below table is actual data of production on Jan. 23. **2016 ( LGD RV Event Sample)**

| | G to G Response Time [ms] | | Uniformity |
|---|---|---|---|
| | Min. | Max. | |
| # 1 | 4.86 | 12.4 | 0.55 |
| # 2 | 4.03 | 13.1 | 0.63 |

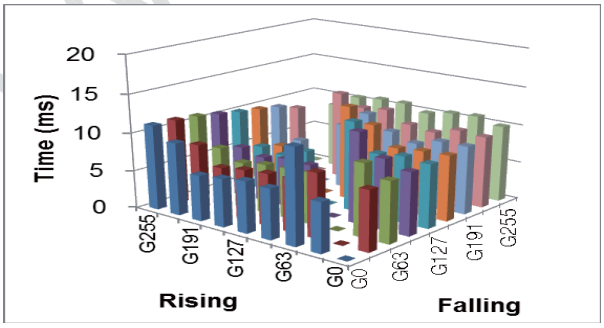


< # 1 >

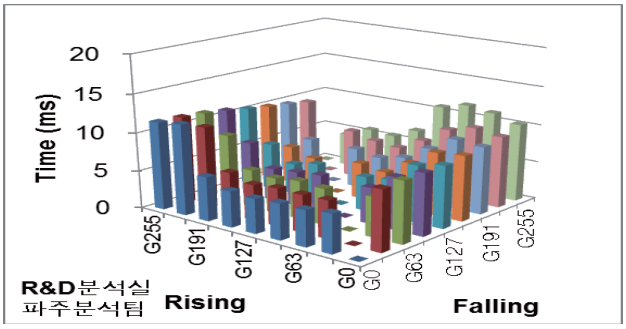


< # 2 >



One step solution for LCD / PDP / OLED panel application: Datasheet, inventory and accessory! www.panelook.com

Global LCD Panel Exchange Center www.panelook.com 屏库:全球液晶屏交易中心



# APPENDIX- X

■ input mode of pixel data

## Mode 1 : Non-Division

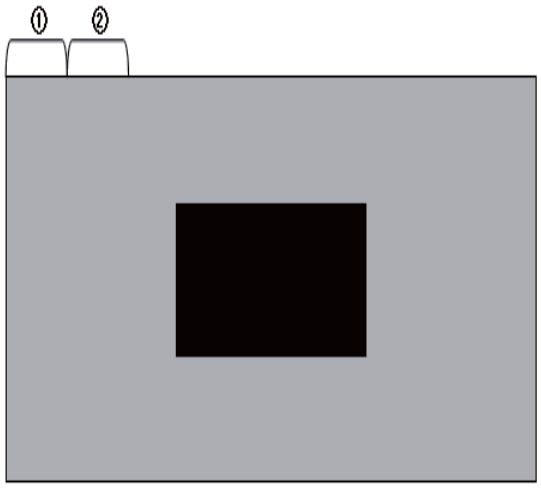


| | 1st Data | 2nd Data | Data # |
|---|---|---|---|
| Lane00 | 1 | 17 | 3825 |
| Lane01 | 2 | 18 | 3826 |
| Lane02 | 3 | 19 | 3827 |
| Lane03 | 4 | 20 | 3828 |
| Lane04 | 5 | 21 | 3829 |
| Lane05 | 6 | 22 | 3830 |
| Lane06 | 7 | 23 | 3831 |
| Lane07 | 8 | 24 | 3832 |

| | 1st Data | 2nd Data | Data # |
|---|---|---|---|
| Lane08 | 9 | 25 | 3833 |
| Lane09 | 10 | 26 | 3834 |
| Lane10 | 11 | 27 | 3835 |
| Lane11 | 12 | 28 | 3836 |
| Lane12 | 13 | 29 | 3837 |
| Lane13 | 14 | 30 | 3838 |
| Lane14 | 15 | 31 | 3839 |
| Lane15 | 16 | 32 | 3840 |

## Mode 2 : 2 Division

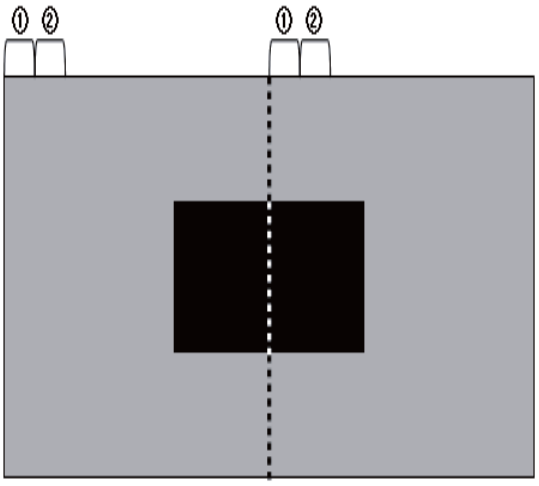


| | 1st Data | 2nd Data | Data # |
|---|---|---|---|
| Lane00 | 1 | 9 | 1913 |
| Lane01 | 2 | 10 | 1914 |
| Lane02 | 3 | 11 | 1915 |
| Lane03 | 4 | 12 | 1916 |
| Lane04 | 5 | 13 | 1917 |
| Lane05 | 6 | 14 | 1918 |
| Lane06 | 7 | 15 | 1919 |
| Lane07 | 8 | 16 | 1920 |

| | 1st Data | 2nd Data | Data # |
|---|---|---|---|
| Lane08 | 1921 | 1929 | 3833 |
| Lane09 | 1922 | 1930 | 3834 |
| Lane10 | 1923 | 1931 | 3835 |
| Lane11 | 1924 | 1932 | 3836 |
| Lane12 | 1925 | 1933 | 3837 |
| Lane13 | 1926 | 1934 | 3838 |
| Lane14 | 1927 | 1935 | 3839 |
| Lane15 | 1928 | 1936 | 3840 |



One step solution for LCD / PDP / OLED panel application: Datasheet, inventory and accessory! www.panelook.com

Global LCD Panel Exchange Center www.panelook.com 屏库:全球液晶屏交易中心



# APPENDIX- X-2

■ input mode of pixel data

## Mode 3 : 4 Division

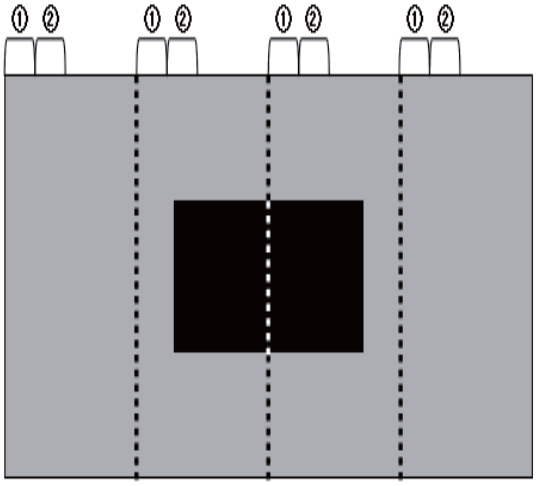


| | 1st Data | 2nd Data | Data # |
|---|---|---|---|
| Lane00 | 1 | 5 | 957 |
| Lane01 | 2 | 6 | 958 |
| Lane02 | 3 | 7 | 959 |
| Lane03 | 4 | 8 | 960 |
| Lane04 | 961 | 965 | 1917 |
| Lane05 | 962 | 966 | 1918 |
| Lane06 | 963 | 967 | 1919 |
| Lane07 | 964 | 968 | 1920 |

| | 1st Data | 2nd Data | Data # |
|---|---|---|---|
| Lane08 | 1921 | 1925 | 2877 |
| Lane09 | 1922 | 1926 | 2878 |
| Lane10 | 1923 | 1927 | 2879 |
| Lane11 | 1924 | 1928 | 2880 |
| Lane12 | 2881 | 2885 | 3837 |
| Lane13 | 2882 | 2886 | 3838 |
| Lane14 | 2883 | 2887 | 3839 |
| Lane15 | 2884 | 2888 | 3840 |

## Mode 4 : 8 Division

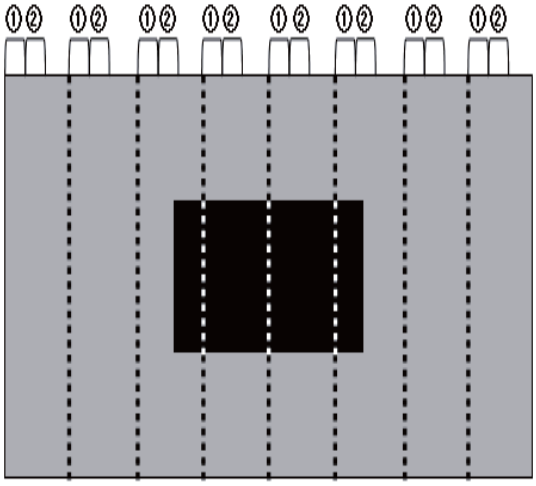


| | 1st Data | 2nd Data | Data # |
|---|---|---|---|
| Lane00 | 1 | 3 | 479 |
| Lane01 | 2 | 4 | 480 |
| Lane02 | 481 | 483 | 959 |
| Lane03 | 482 | 484 | 960 |
| Lane04 | 961 | 963 | 1439 |
| Lane05 | 962 | 964 | 1440 |
| Lane06 | 1441 | 1443 | 1919 |
| Lane07 | 1442 | 1444 | 1920 |

| | 1st Data | 2nd Data | Data # |
|---|---|---|---|
| Lane08 | 1921 | 1923 | 2399 |
| Lane09 | 1922 | 1924 | 2400 |
| Lane10 | 2401 | 2403 | 2879 |
| Lane11 | 2402 | 2404 | 2880 |
| Lane12 | 2881 | 2883 | 3359 |
| Lane13 | 2882 | 2884 | 3360 |
| Lane14 | 3361 | 3363 | 3839 |
| Lane15 | 3362 | 3364 | 3840 |



One step solution for LCD / PDP / OLED panel application: Datasheet, inventory and accessory! www.panelook.com

Global LCD Panel Exchange Center www.panelook.com 屏库:全球液晶屏交易中心



# APPENDIX- XI-1

## ■ Vx1 Initialization Characteristics

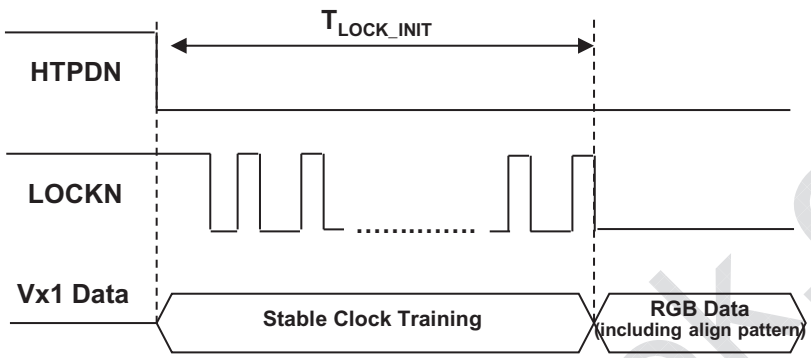


*1). UHD120Hz T-Con*

| Characteristics | Symbol | Min | Typ | Max | Unit |
|---|---|---|---|---|---|
| Initial CDR lock time (From Stable CDR training to CDR lock) | $T_{LOCK_INT}$ | 0 | | **310** | ms |

*2). UHD60Hz T-Con*

| Characteristics | Symbol | Min | Typ | Max | Unit |
|---|---|---|---|---|---|
| Initial CDR lock time (From Stable CDR training to CDR lock) | $T_{LOCK_INT}$ | 0 | | **310** | ms |

www.panelook.com



One step solution for LCD / PDP / OLED panel application: Datasheet, inventory and accessory! www.panelook.com

Global LCD Panel Exchange Center www.panelook.com 屏库:全球液晶屏交易中心



# APPENDIX- XI-2

## ■ Vx1 Lock Timing In Normal Operation

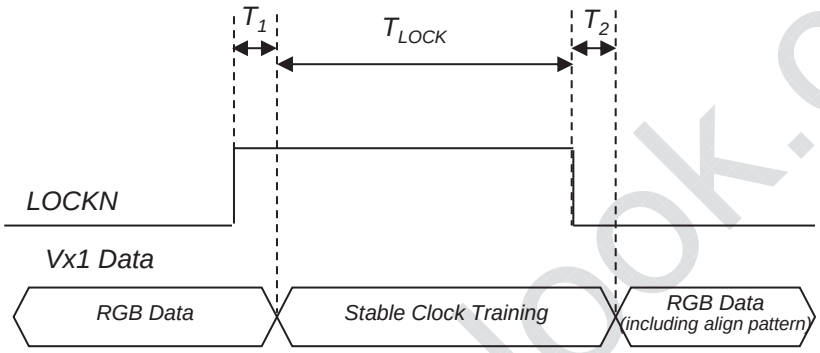


| Characteristics | Symbol | Min | Typ | Max | Unit |
|---|---|---|---|---|---|
| CDR lock time from stable clock training pattern to LOCKN "Low" in normal operation | $T_{LOCK}$ | | | 2 | ms |
| Latency from LOCKN "High" to clock training pattern | $T_1$ | | | 100 | us |
| Latency from clock "Low" to normal RGB Data | $T_2$ | | | 100 | us |

※ *Vx1 Rx should get clock training pattern in $T_1$*

※ *Vx1 Rx should get RGB Data (including align pattern) in $T_2$*



One step solution for LCD / PDP / OLED panel application: Datasheet, inventory and accessory! www.panelook.com