Product Datasheet

The global certified BLD-320-C is a dual stage high efficiency smart LED driver. 10kV surge protection level, 100khour long life and 7-year warranty provide high confidence to luminaire users. It supports not only traditional 4-in-1 control, but also DALI2.0 and other smart protocols. NFC and cable programming are both available for users. All around protections including digital OTP (internal and external by NTC) with auto-recovery secure 24hour non-stop operation for luminaires.

☑ Horticultural ☑ Stadium ☑ Flood ☑ Harbor ☑ UV

- Features 2
- Model List 2
- Technical Data 3
- Safety/EMC Compliance 4
- Dimming 4
- Programming 6
- Lifetime vs. Case Temperature 8
- Power Factor vs. Load 8
- THD vs. Load 9
- Efficiency vs. Load 9
- Inrush Current 12
- Dielectric Strength 12
- Tc Point 13
- Packaging Information 13
- Mechanical Design 14
- Output Operation Range 20
- Revision History 23

July 25, 2024, all rights reserved.

Features

- Supply Voltage: 90-305Vac or 127-420Vdc, 380Vac for 2 hours
- Great Surge Immunity 10kV
- **-60℃ Cold Ambient Startup**
- 100,000Hour Life @ Tc=75℃
- 7 Year Warranty @ Tc<=75℃
- Customized Endcap for Grow Light
- Active Daisy Chain and Master Mode
- Airset™ NFC Programmability
- +/-2% Output Current Accuracy
- Isolated 0-10V/PWM/Time/DALI2.0 (Optional) Dimmable
- Dim Off with 0.5W Standby Power
- 12V 300mA Auxiliary Power to Power Controllers and Fans (Optional)
- UL Class P, ENEC/CB/CCC SELV Output
- Global Certified Model Available
- Safety according to UL8750, EN 61347-1, 61347-2-13, 62384

Model List

Model Number	Input Voltage Range	Output Power	Output Voltage	Full Power Settable Current Min	Full Power Settable Current Max
BLD-320-C105-XYZ	90 ~ 305 Vac	320 W	183-421Vdc	760mA	1050mA
BLD-320-C140-XYZ	90 ~ 305 Vac	320 W	137-305Vdc	1050mA	1400mA
BLD-320-C210-XYZ	90 ~ 305 Vac	320 W	91-229Vdc	1400mA	2100mA
BLD-320-C420-XYZ	90 ~ 305 Vac	320 W	46-114Vdc	2800mA	4200mA
BLD-320-C700-XYZ	90 ~ 305 Vac	320 W	27-64Vdc	5000mA	7000mA

XY=	Dimming Method	Programmable	12Vaux	Dim-off
NN	-	-	-	-
DN	0-10V/PWM/Time	Cable	-	No Dim-off as default status, programmed to have Dim-off
EN	0-10V/PWM/Time	Cable	300mA	√
TR	Time/Set Current	NFC Wireless	-	-
DR	0-10V/PWM/Time	NFC Wireless	-	No Dim-off as default status, programmed to have Dim-off
ER	0-10V/PWM/Time	NFC Wireless	300mA	√
AR	DALI2.0	NFC Wireless	-	√
MR	DMX512 + RDM	NFC Wireless	-	√

Z=	U	V	S	S-GLB000	W	D
Input Cable	3 pin UL cable with ground	3 pin UL cable with ground	3 pin VDE cable with ground	3 pin Global cable with ground	3 pin VDE cable with ground	2 pin VDE cable without ground
Output Cable	2 pin UL cable without Ground	3 pin UL cable with ground	2 pin VDE cable without ground	2 pin Global cable without ground	3 pin VDE cable with ground	2 pin VDE cable without ground
Certified Input Voltage Range	UL Listed Class P FCC 120-277Vac	UL Listed Class P FCC 120-277Vac	ENEC CB RCM Class I 220-277Vac	UL Recognized 120-277Vac ENEC CB RCM Class I 220-277Vac	Class I 120-277Vac	ENEC CB Class II 220-277Vac

Technical Data

Input Voltage	90～305Vac or 127V-420Vdc, 380Vac for 2 hours
Input Frequency	47～63Hz
Power Factor	>0.95@60-100%load, refer to PF vs. Load curve
THD	<15%@60-100%load, refer to THD vs. Load curve
Input Current	2.9Amax@120Vac & Full-Load, 1.5Amax@220Vac & Full-Load
Inrush Current	See Inrush Current Section in the datasheet
Leakage Current	0.75MIU max @277Vac 60Hz, UL8750 0.7mA max @240Vac 50/60Hz, IEC60598-1
Input Under Voltage	Shut down and auto-restart
Surge Protection	Line to line 6kV, line to ground 10kV, IEC 61000-4-5
Current Accuracy	±2%Io for programmable model, ±5%Io for non-programmable model
Ripple Current	Ip-p:5%Io max
Setup Time	1.2s max
Overshoot	10% Io max & LED Load
Output Over Voltage	120% Vomax, typ.
Short Circuit	Auto recovery. The output recovers when short is removed.
Over Temperature	Lower the output current when Tc≧105±10℃; Auto Recovery When Tc≦70±10℃
Auxiliary Power (Vaux)	12V+/-5%, 300mA max
Operating Temperature	Case Temperature Tc=-60℃～+90℃； 10%RH～100%RH
Storage Temperature	-40℃～+85℃； 5%RH～100%RH
MTBF	≥280,000 hours, 75℃ case temperature (MIL-HDBK-217F)
Lifetime	≥100,000 hours, 75℃ case temperature, refer to life vs. Tc curve
Case Temperature	90℃ max, marked in the Tc point of label
Dimensions	8.85x2.66x1.52 by inch (body), 9.88x2.66x1.52 by inch (endcaps included)
	225.0x68.0x38.5 by mm (body), 251.0x68.0x38.5 by mm (endcaps included)
Net Weight	1150g
Packing	See Package Information Section in the datasheet

Notes: Unless specified, all the test results are measured in 25℃ room temperature.

Safety/EMC Compliance

Safety Standards	Description
UL8750	Light emitting diode(LED) equipment for use in lighting products
UL1012/1310	Power units other than class 2 / Class 2 power units
IEC 61347-1	Lamp control gear Part 1: general and safety requirements
IEC 61347-2-13	Lamp control gear Part 2-13: particular requirement for d.c. or a.c. supplied electronic control gear for LED modules
IEC 62384	DC or AC supplied electronic control gear for LED modules - Performance requirements
IEC 55015/FCC Part 15	Conducted emission test & radiated emission test; ANSI C63.4:2009 Class B
IEC 61000-3-2	Harmonic current emissions; Class C
IEC 61000-3-3	Voltage fluctuations & flicker
IEC 61000-4-2	Electrostatic discharge (ESD): 8 kV air discharge, 4 kV contact discharge
IEC 61000-4-3	Radio frequency electromagnetic field susceptibility test (RS)
IEC 61000-4-4	Electrical fast transient (EFT)
IEC 61000-4-5	Surge immunity test
IEC 61000-4-6	Conducted radio frequency disturbances test (CS)
IEC 61000-4-8	Power frequency magnetic field test
IEC 61000-4-11	Voltage dips
IEC 61547	Electromagnetic immunity requirements applies to lighting equipment

Dimming

Parameter	Min.	Typ.	Max.
Vdim Sourcing Current	100uA	150uA	200uA
Vdim Allowed Input Voltage	-20 V		20 V
0-10V Dimming Range	10% (Vdim=1V)	Linear	100% (Vdim=9~10V)
PWM Dimming Range	10% (Duty=10%)	Linear	100% (Duty=90-100%)
Default Dim off Threshold	0.4V or 4%	0.5V or 5%	0.6V or 6%
Default Dim off Threshold	0.6V or 6%	0.7V or 7%	0.8V or 8%
PWM High	3.8V		9V
PWM Low	0V		0.6V
PWM Frequency	300Hz		2kHz
DALI Interface Standard		IEC62386, part 101,102,207	
DA1,DA2 High Level	9.5	16	22.5
DA1,DA2 Low Level	-6.5	0	6.5
DA1,DA2 Current	0		2mA
DMX+ & DMX- Voltage	-6V		6V
DMX to Ground Resistance	25Mohm		
Logic 0/1 (DMX+ to DMX-) Threshold		0.2V	
Communication Baud Rate		250kbps	
Fast Dimming[1] On-Off Transition		300ms	
Fast Dimming 10-100% Io Transition		70ms	

Notes [1]: Fast dimming feature is only available by models with -FD0000 suffix.

- **Default Dimming Curves**

a. 0-10V dimming without dim-off

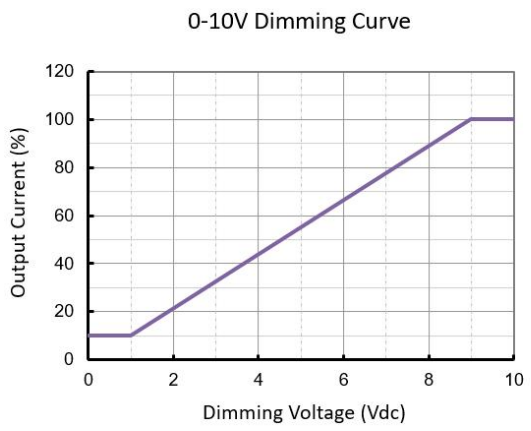

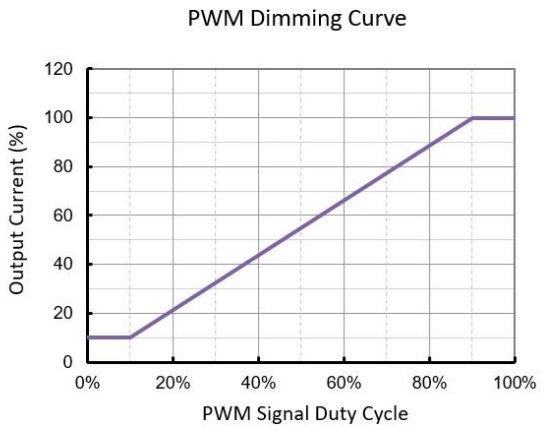

b. 0-10V dimming with dim-off

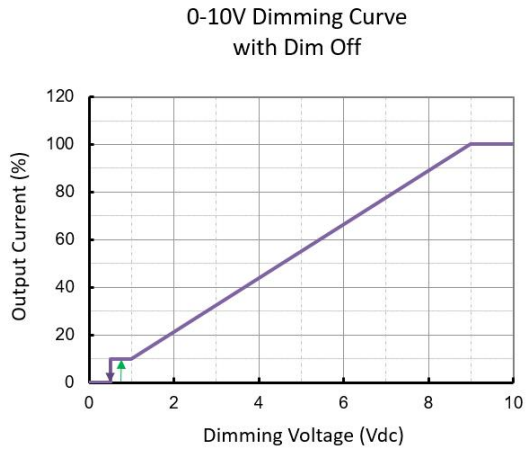

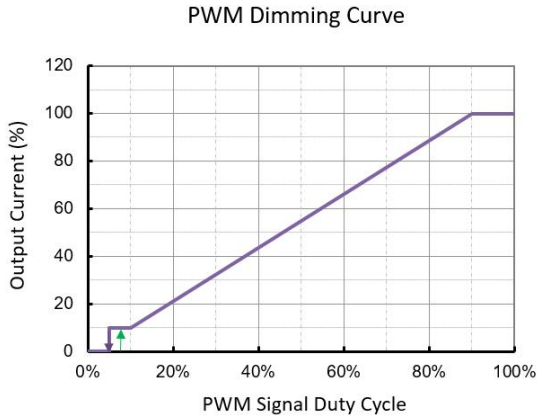

c. DALI and DMX dimming curves

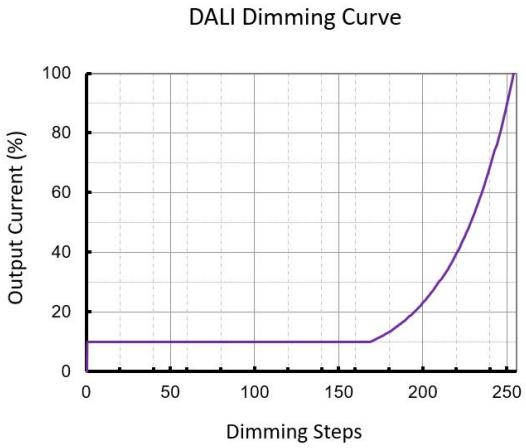

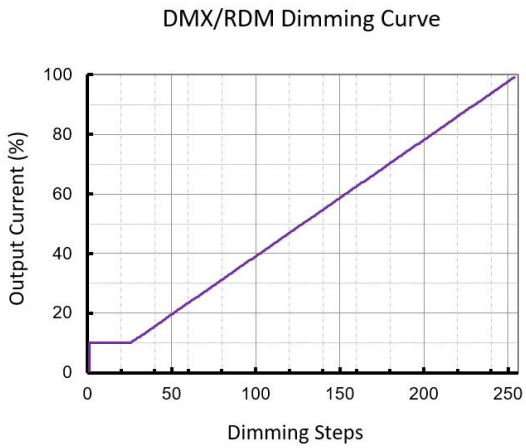

Note: Both DALI and DMX dimming curves can be customized to be linear or logarithmic as default.

Programming

- **Programmable Functions**

uPowerTek LED drivers offer a range of configurable functions to meet specific lighting requirements. The Output Current, Dimming Mode, Dim Off/On Voltage Threshold, and Timer Dimming can be set as basic programming functions. Constant Lumen Output (CLO) can also be customized to ensure consistent light performance. Additionally, depending on the different product model numbers, users can benefit from programming Thermal Protection by external NTC (with extra cable), DALI/D4i Features, and DMX addressing.

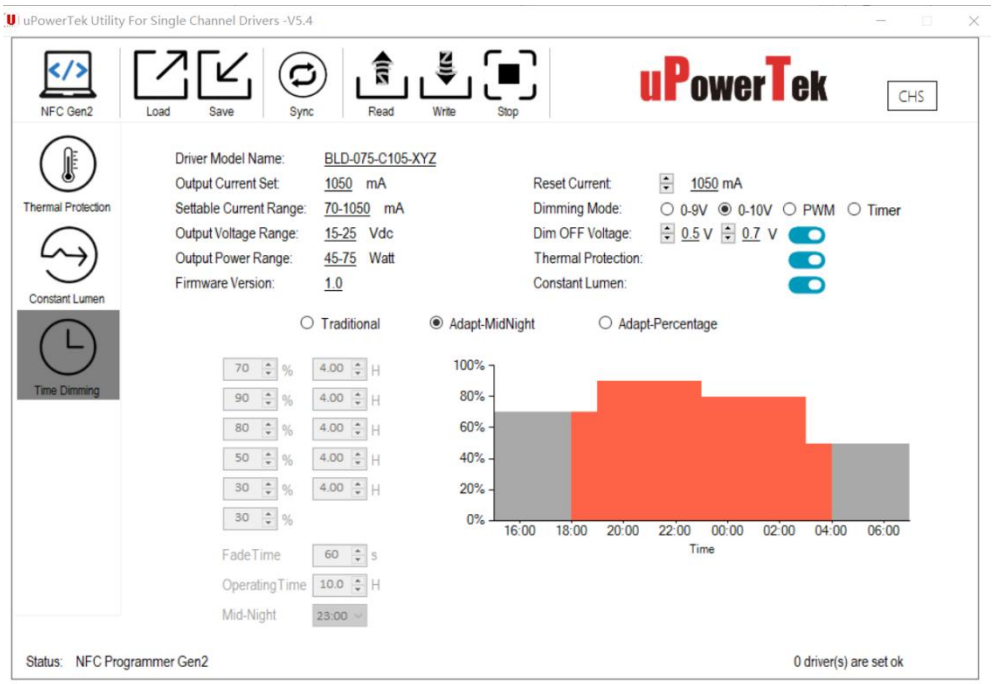

uPowerTek Programming Software Interface

- **Required Equipment**

To program uPowerTek LED drivers, users will need specific equipment based on their preferred method. For wired programming, the uPowerTek Cable Programmer is essential. For NFC wireless programming, users can use a smartphone with either IOS or Android, the uPowerTek NFC Programmer, or the FEIG NFC Programmers. These tools ensure a seamless and efficient setup process, realizing precise customization of the LED driver settings.

Cable Programmer

NFC Programmer V1

NFC Programmer V2

FEIG NFC Programmer

Android or iPhone

- **Connection Guide**

This guide provides simple connection diagrams to help users understand the programming system. For more detailed operating instructions, including step-by-step procedures and additional configurations, please visit our website. You can download the comprehensive user manual and necessary software from the following link: https://www.upowertek.com/download-2/.

Wired Programming

Wireless Programming

Cellphone Programming

Lifetime vs. Case Temperature

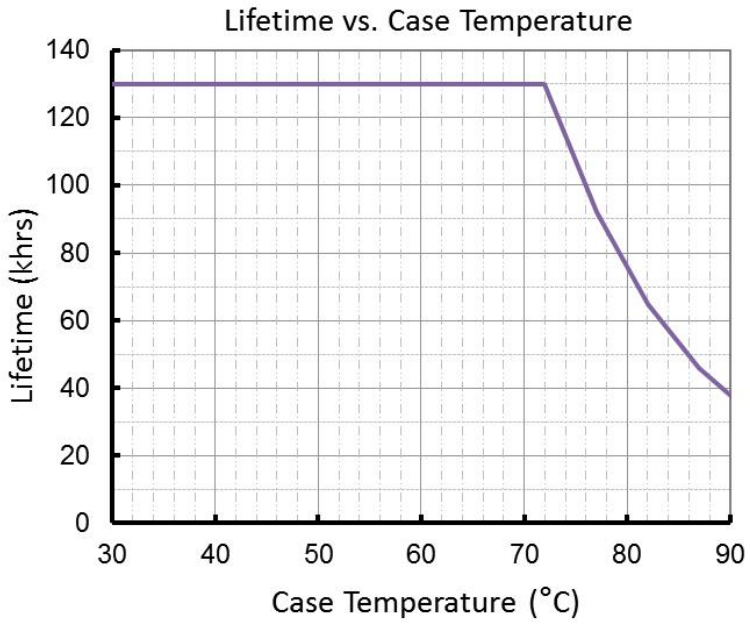

(End of Life: Maximum Failure Rate=10%)

Power Factor vs. Load

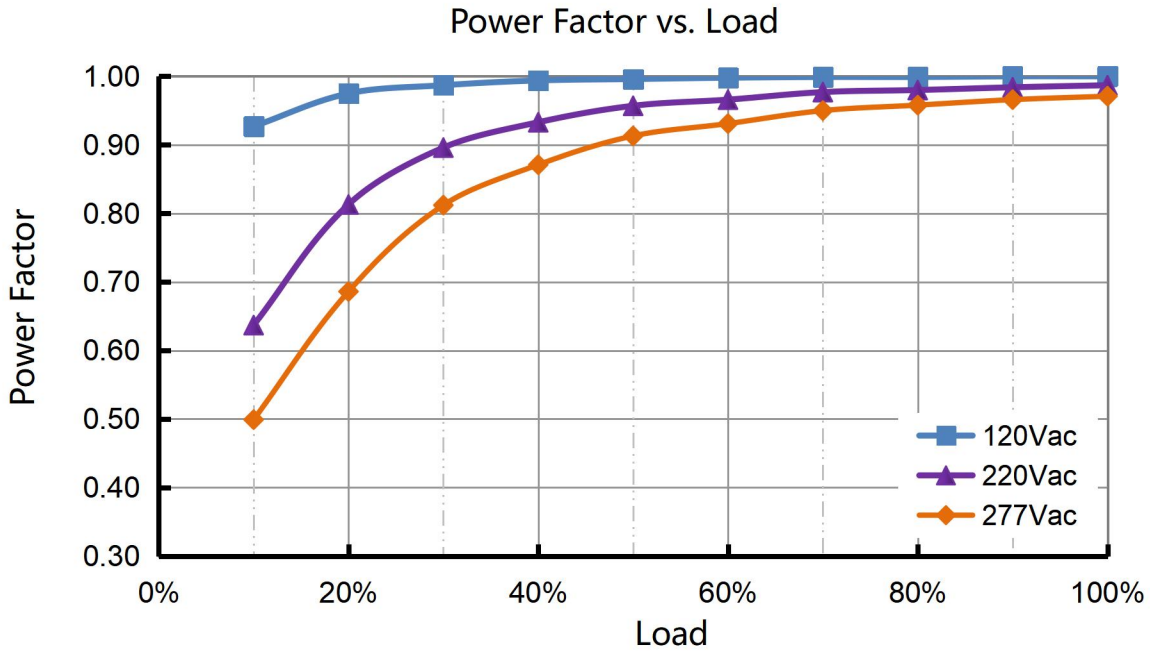

THD vs. Load

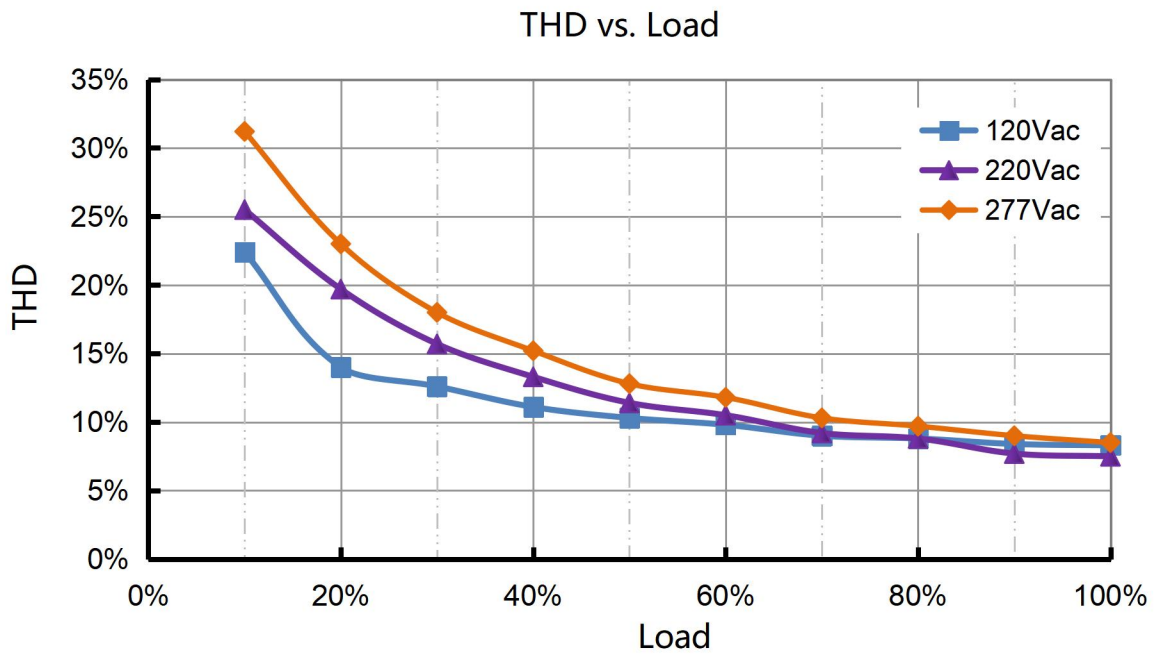

Efficiency vs. Load

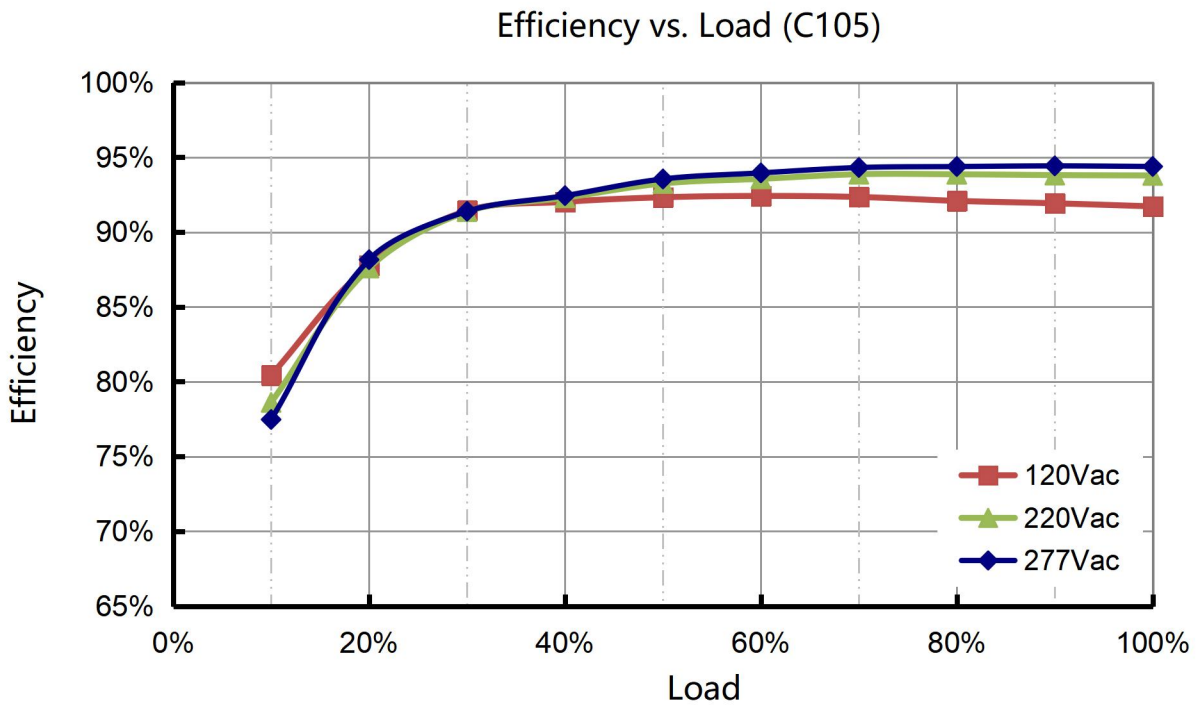

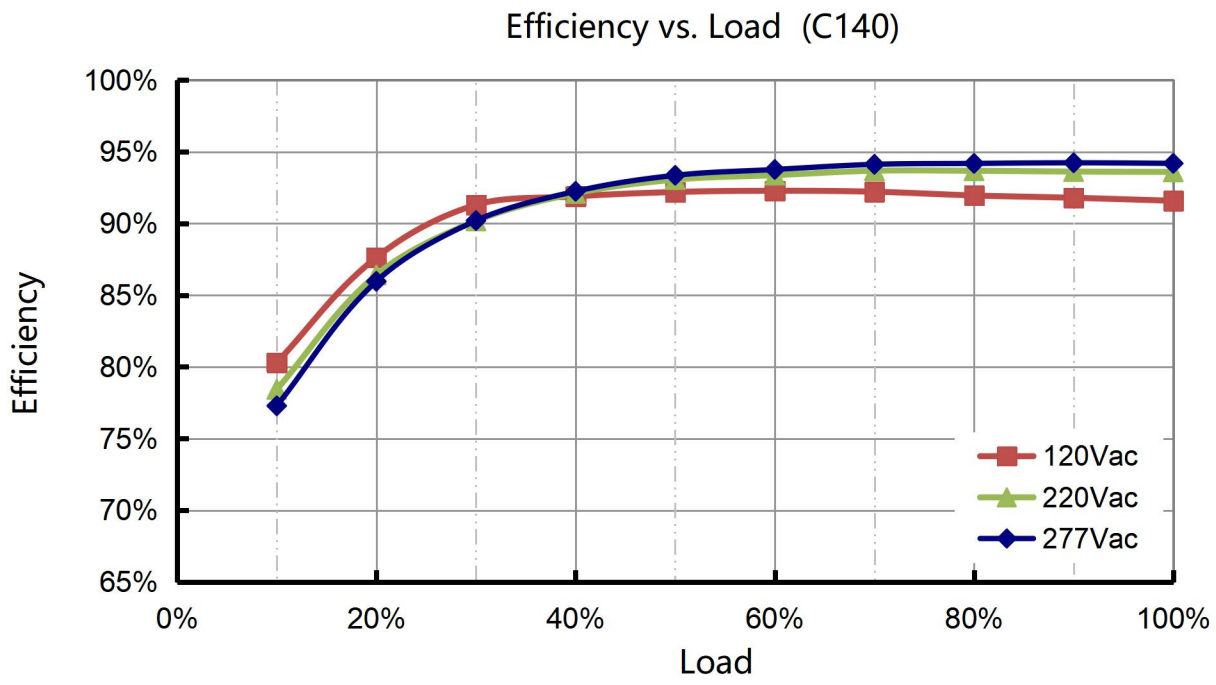
Efficiency vs. Load (C140)
100%
95%
90%
85%
80%
75%
70%
65%
Efficiency
0%
20%
40%
60%
80%
100%
Load
120Vac
220Vac
277Vac

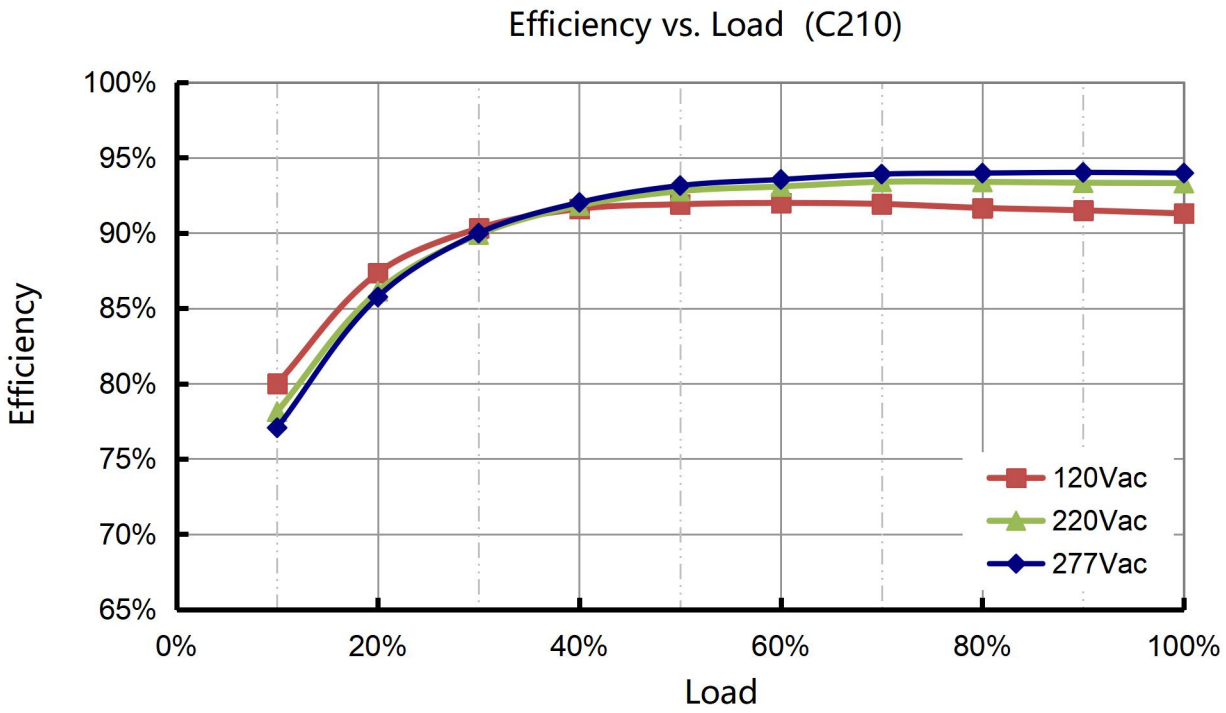
Efficiency vs. Load (C210)
100%
95%
90%
85%
80%
75%
70%
65%
Efficiency
0%
20%
40%
60%
80%
100%
Load
120Vac
220Vac
277Vac

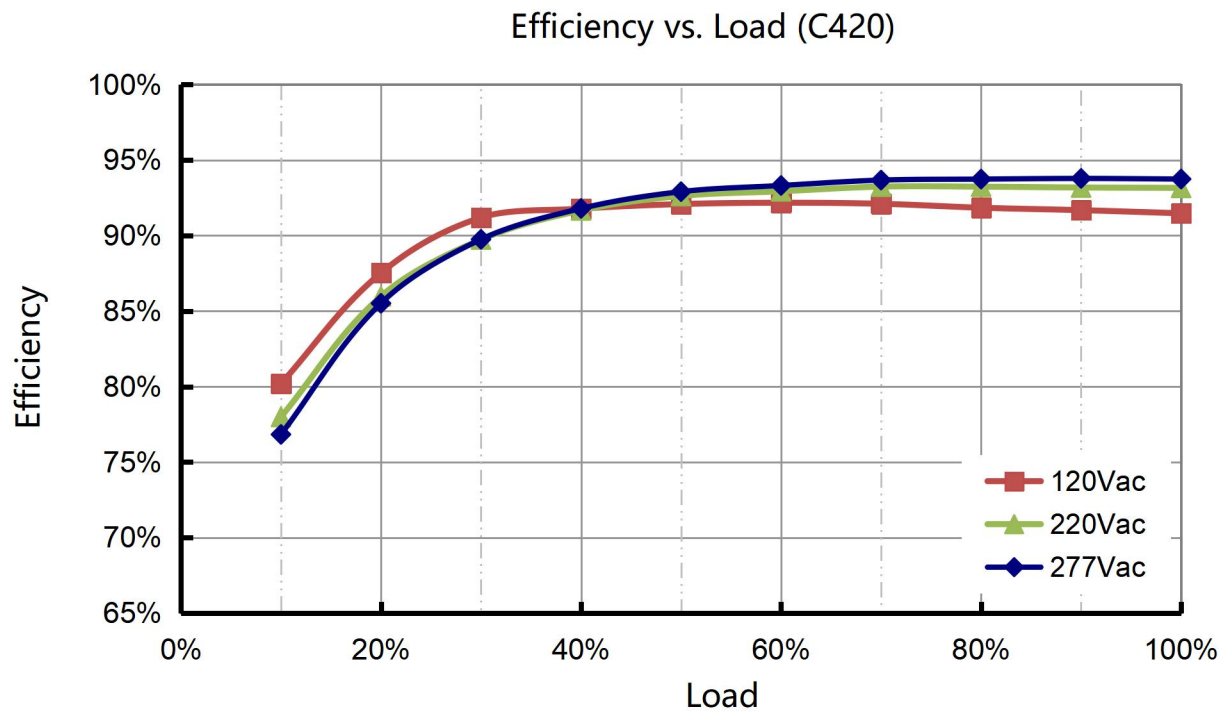
Efficiency vs. Load (C420)
100%
95%
90%
85%
80%
75%
70%
65%
Efficiency
0%
20%
40%
60%
80%
100%
Load
120Vac
220Vac
277Vac

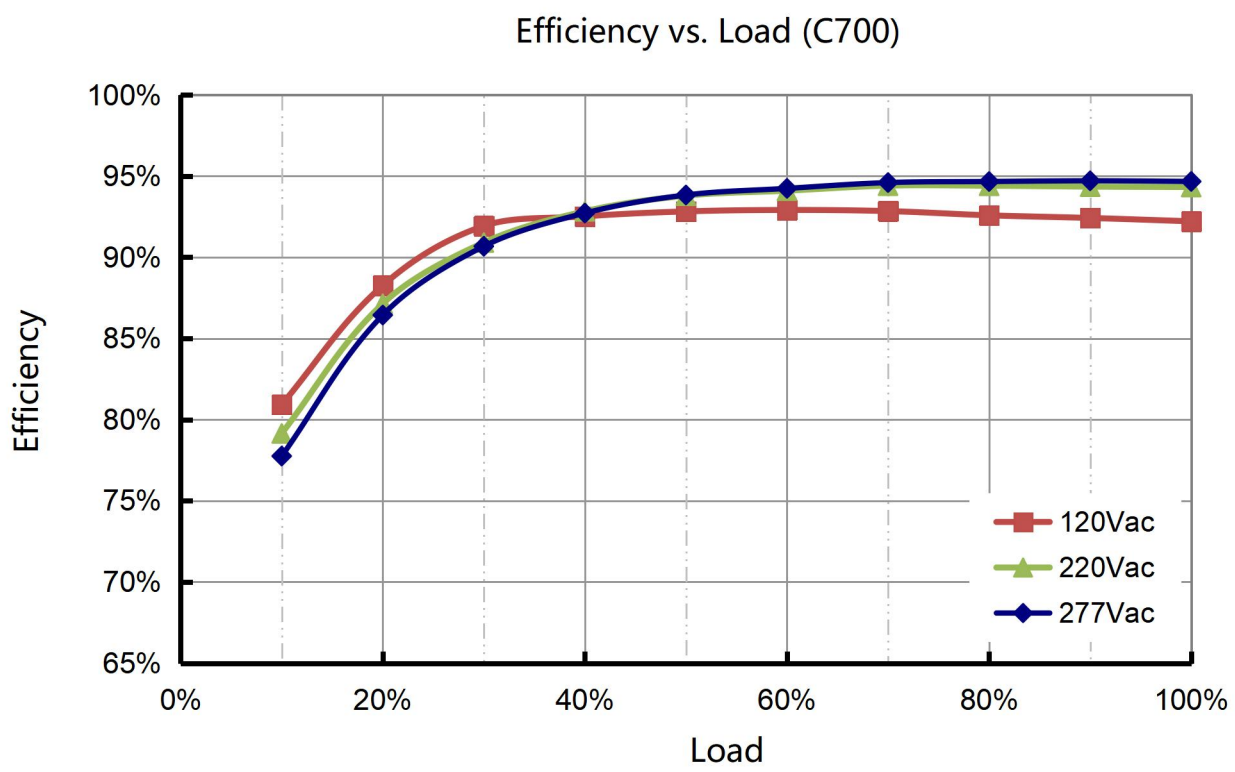
Efficiency vs. Load (C700)
100%
95%
90%
85%
80%
75%
70%
65%
Efficiency
0%
20%
40%
60%
80%
100%
Load
120Vac
220Vac
277Vac

Inrush Current

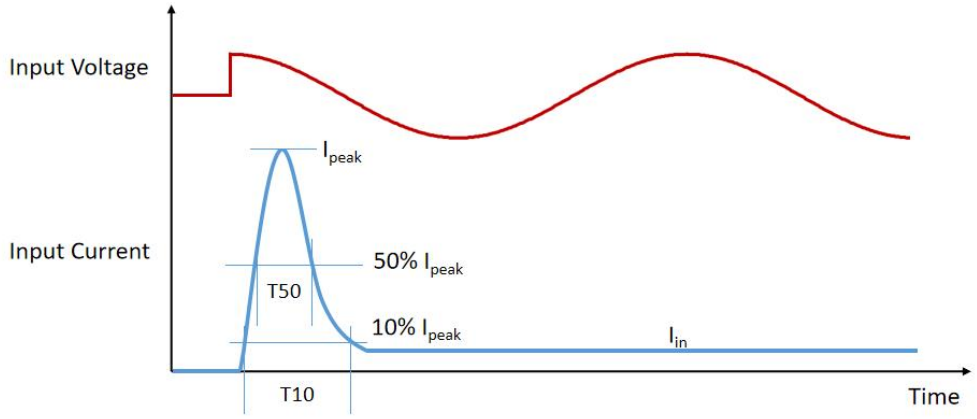

Input Voltage	I_{peak}	10% -10% T10 Duration	50% -50% T50 Duration
120Vac	16.6A	4.28ms	1.4ms
220Vac	31.2A	3.88ms	1.3ms
277Vac	39.8A	3.80ms	1.3ms

- MCB Suggestion

Type	B10	B16	B25	B32	C10	C16	C25	C32	D10	D16	D25	D32
Driver Quantity	1	2	4	5	2	4	7	9	5	8	12	16

Note: Calculated with MCB S200 series manufactured by ABB at 230Vac Input condition

Dielectric Strength

Unit: Vac	Input	Output	Dimming	Case
Input	-	3750	3750	1554
Output	3750	-	1554	1554
Dimming	3750	1554	-	1554
Case	1554	1554	1554	-

Tc Point

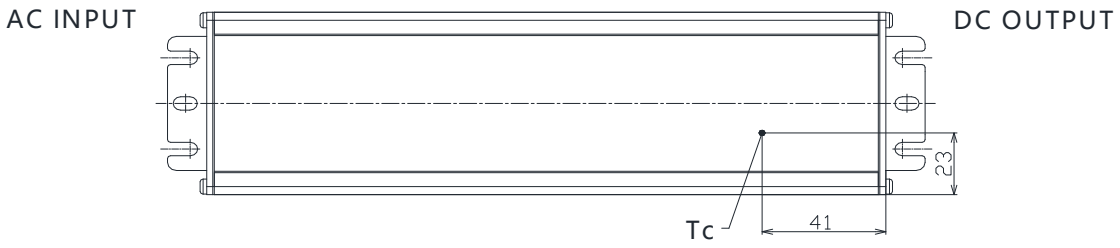

Packaging Information

Typical Carton Dimension(L×W×H)	490×370×125 mm
Positioning plate	2pcs/carton
Shield Board	1pcs/carton
LED Drivers/LED	8pcs/carton
Net Weight	9.0 kg/carton
Gross Weight	10.0 kg/carton

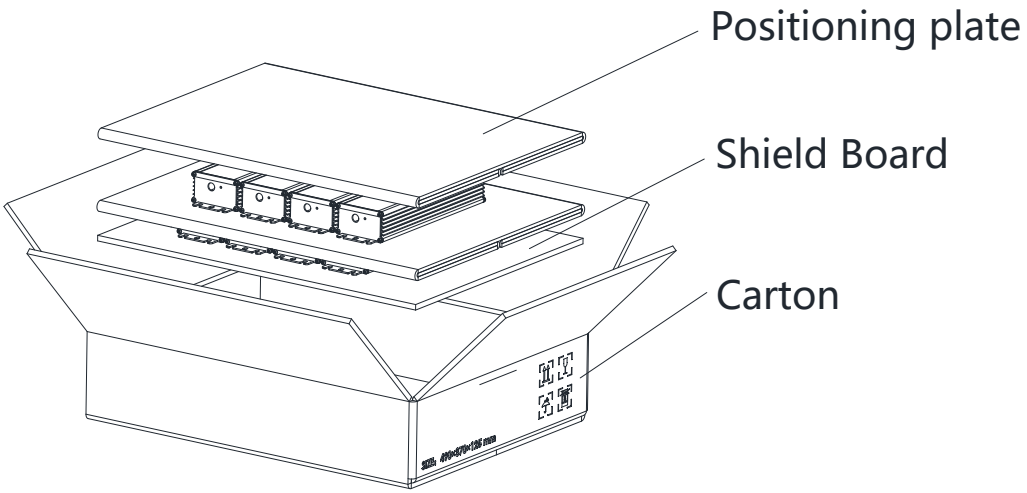

Mechanical Design

- **BLD-320-Cxxx-NN/TRU (UL Cable)**

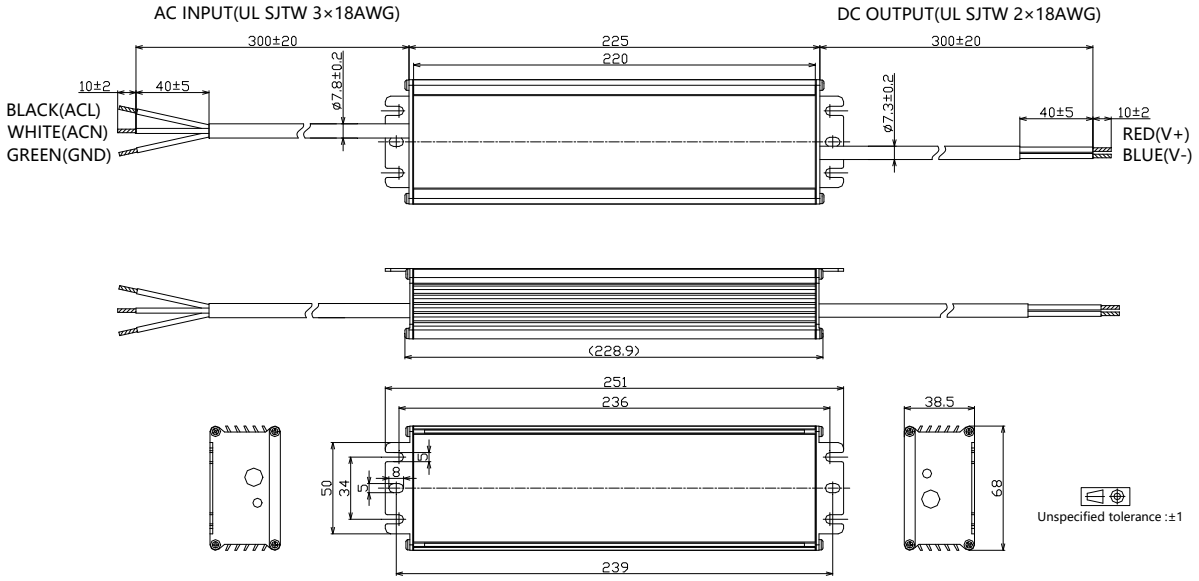

- **BLD-320-Cxxx-DN/DRU (UL Cable)**

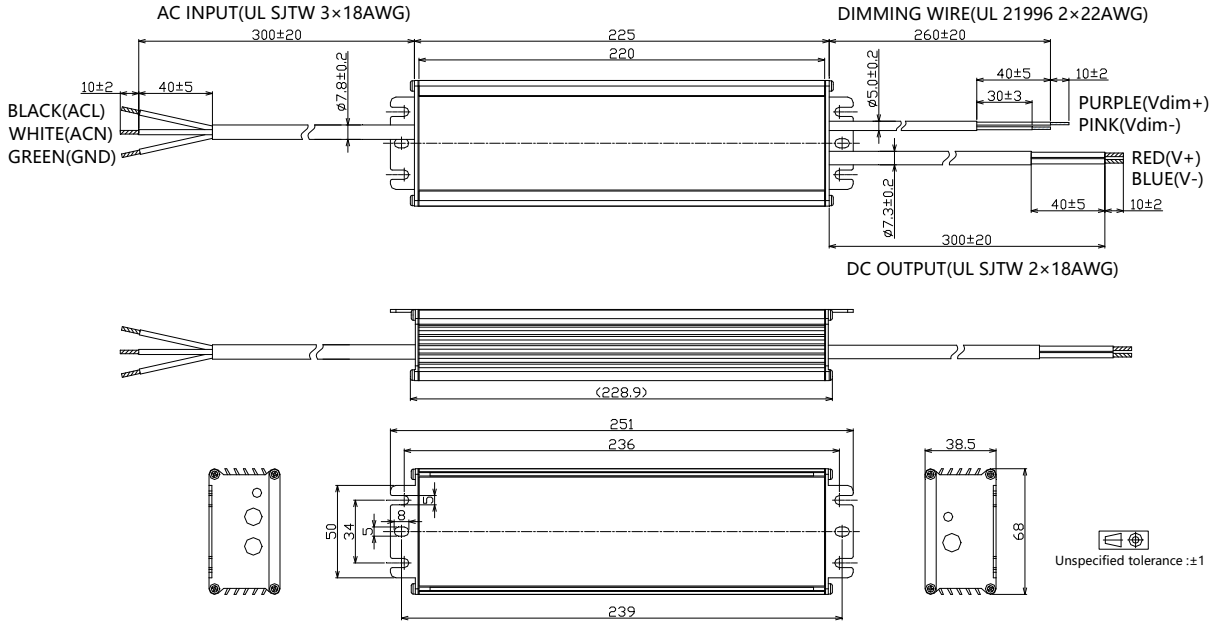

- **BLD-320-Cxxx-ERU (UL Cable)**

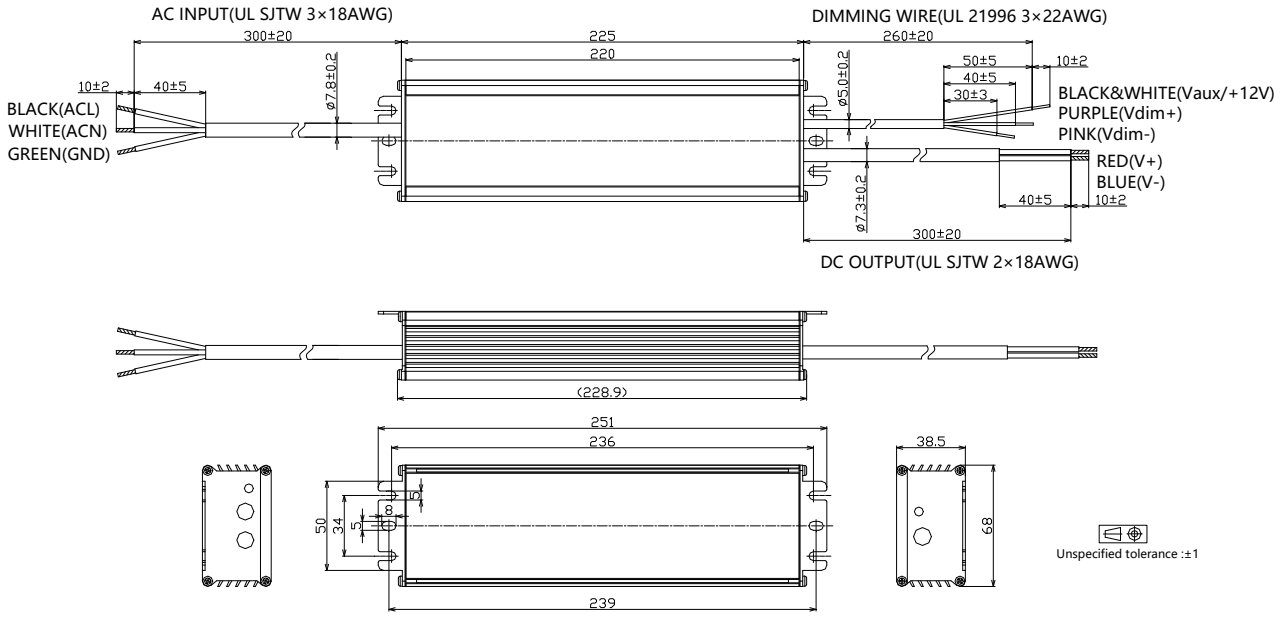

- **BLD-320-Cxxx-ARU (UL Cable)**

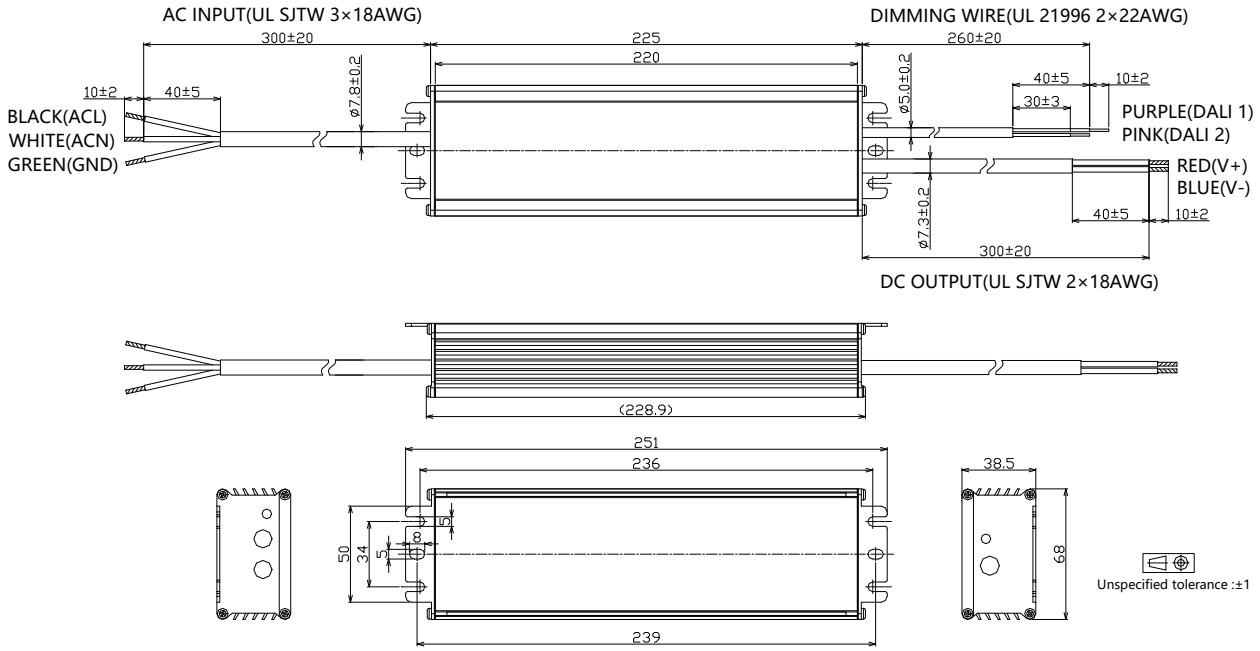

- **BLD-320-Cxxx-MRU (UL Cable)**

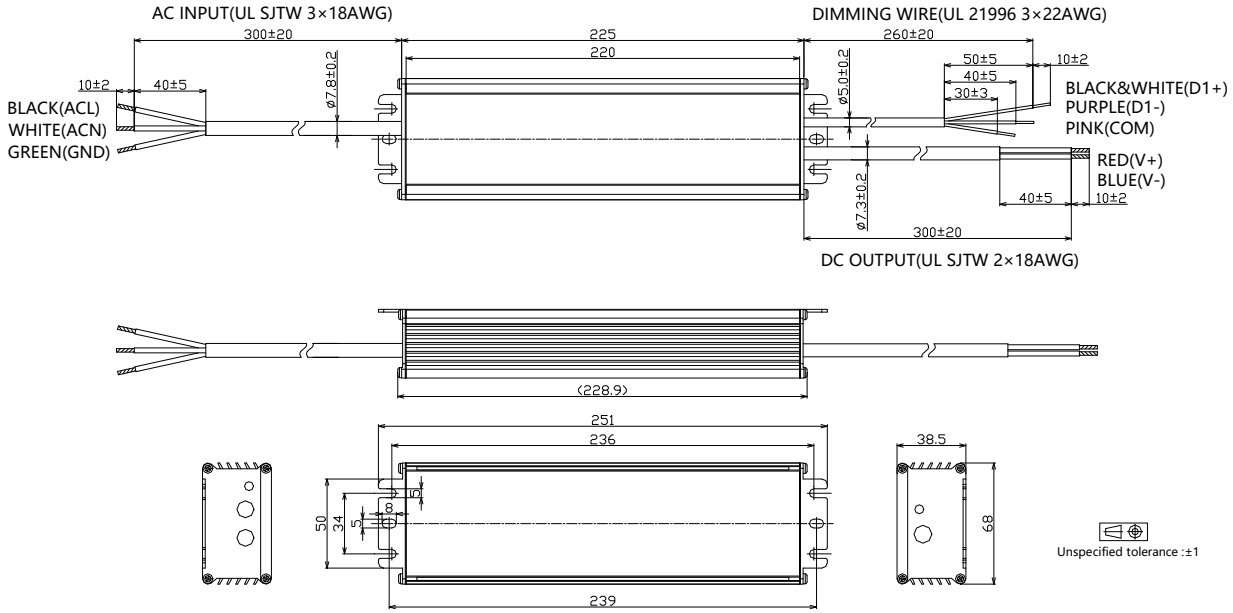

- **BLD-320-Cxxx-NN/TRS (VDE Cable)**

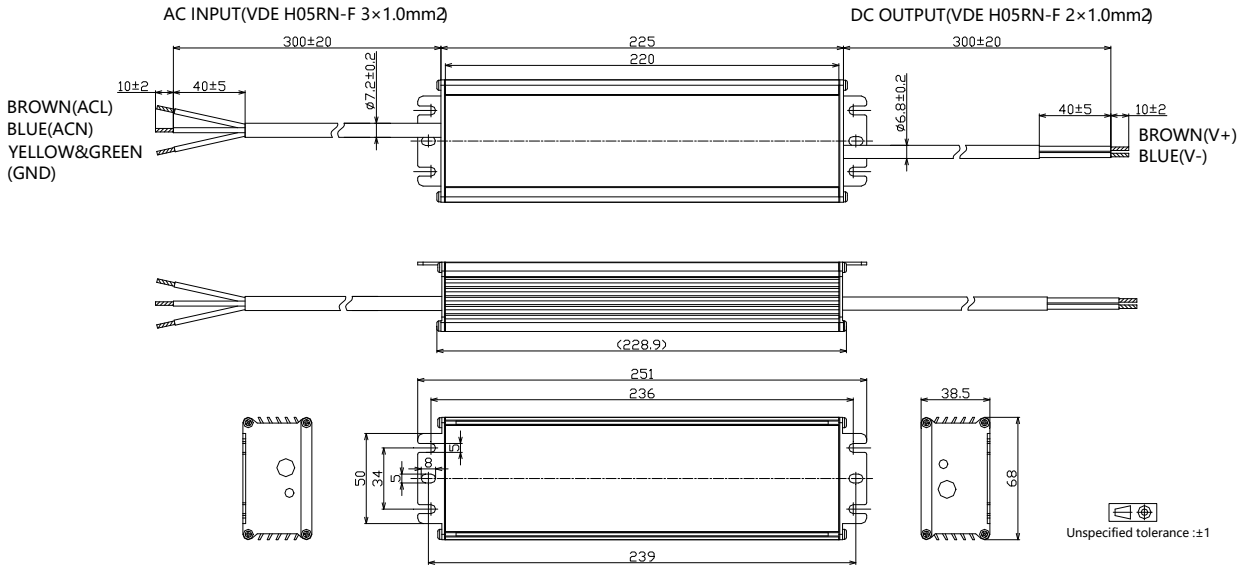

- **BLD-320-Cxxx-DN/DRS (VDE Cable)**

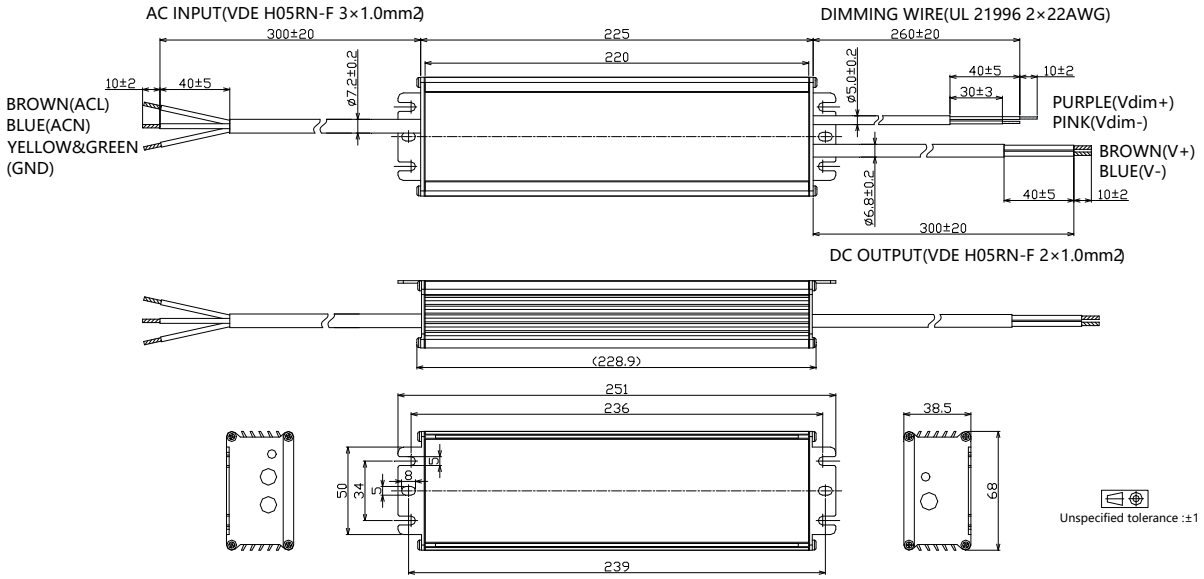

- **BLD-320-Cxxx-EN/ERS (VDE Cable)**

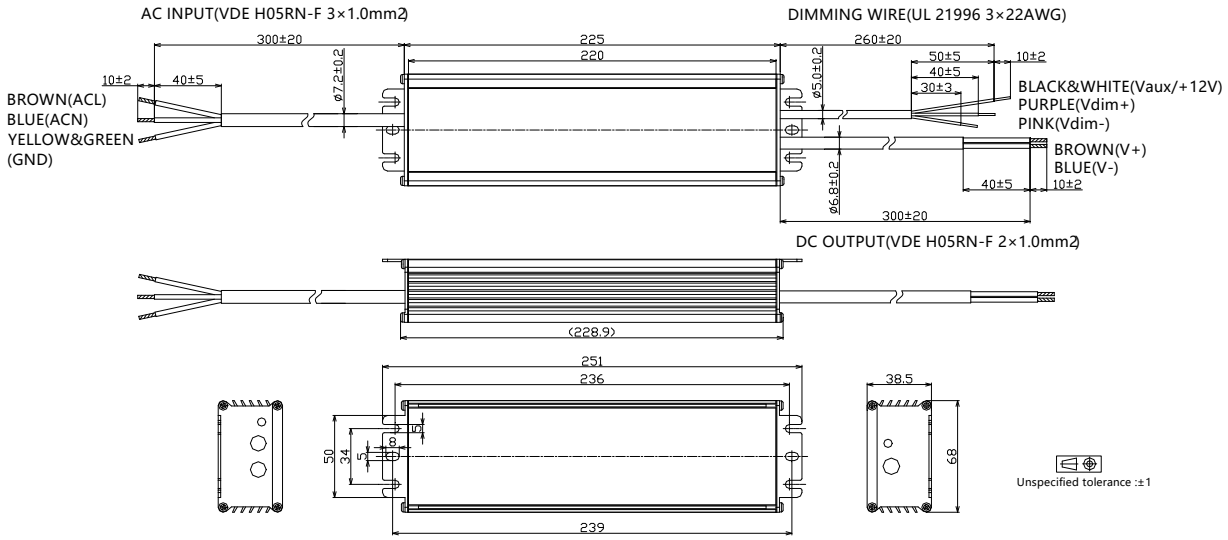

- **BLD-320-Cxxx-ARS (VDE Cable)**

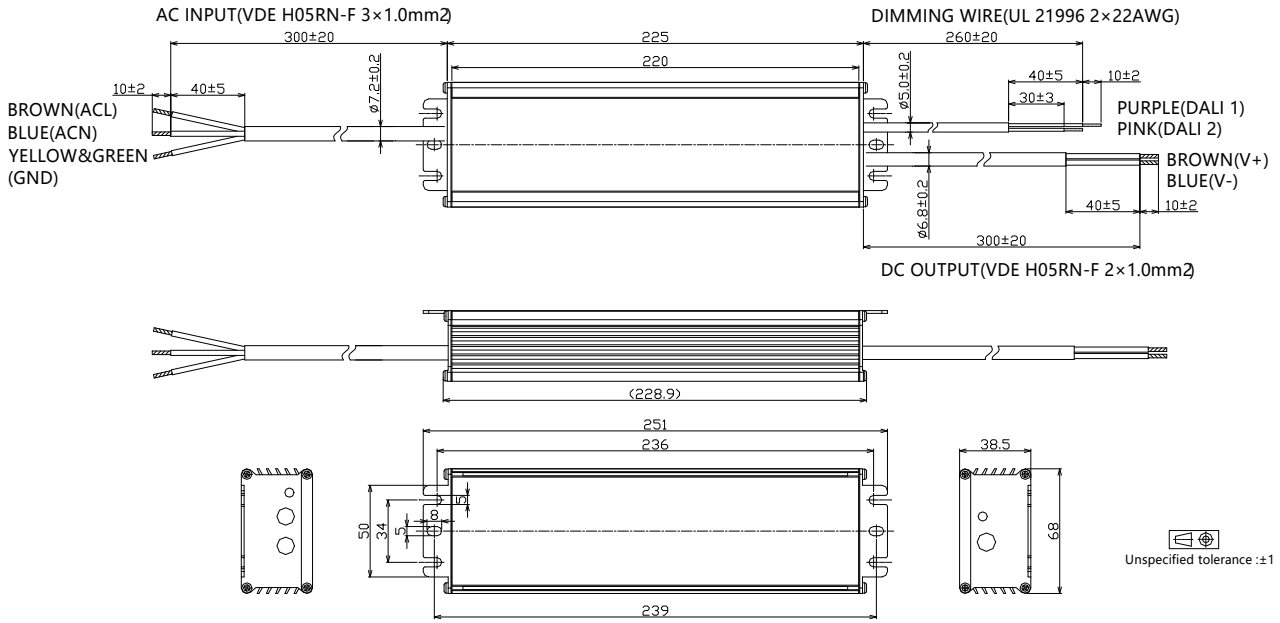

- **BLD-320-Cxxx-MRS (VDE Cable)**

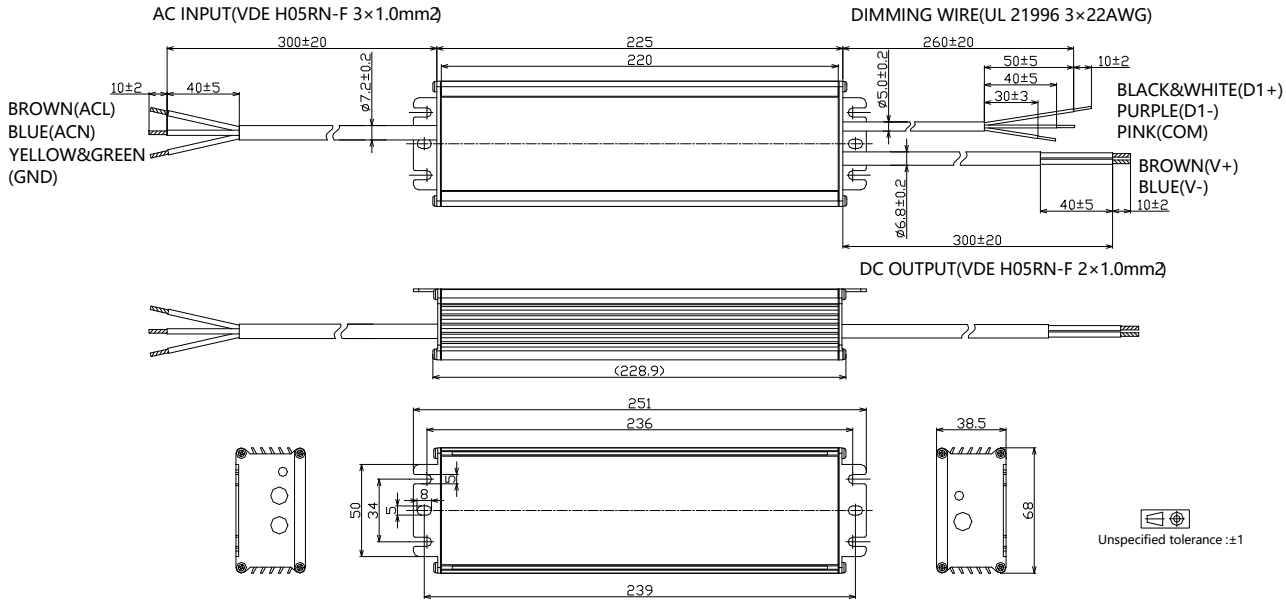

- Customized Functional End Cap Version

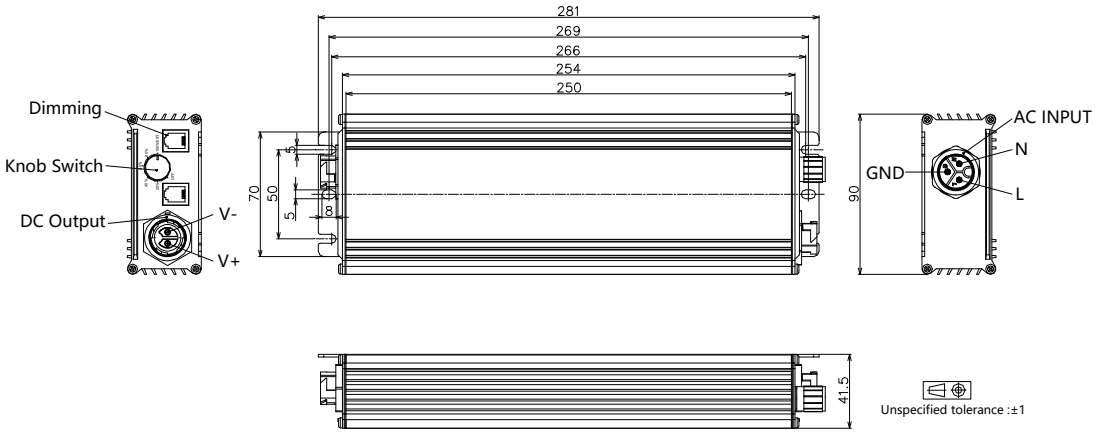

- Add suffix #abcd00 to the end of part number to indicate different configuration. Please refer to product application note AN06 or contact with us for more like **active daisy chain, master mode and button dimming** etc.

Item	Value Definition	Description
Input	a	F: M19 waterproof connector P: C14 plug N: Same cable as standard version
Output	b	F: M19 waterproof connector, 2 pin N: Same cable as standard version
Dimming	c	F: M12 waterproof connector R: RJxx (xx=25,14,12,11) connector x 2 S: 3.5mm multi-media plug N: Same cable as standard version
Knob	d	K: Knob with steps B: Knob without steps N: No knob

- RJ25 Pin Description (can be customized according to control system)

Pin	Description
1,6	12V Aux-power
2,5	Dim+
3,4	Dim-/RTN

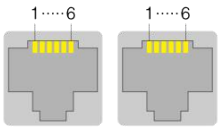

- Knob Description

Position	Description
100%/EXT	If there is no external control, 100% output. If there is external control, output is controlled by external signal.
Off,20%,40%,60%,80%	External signal invalid.

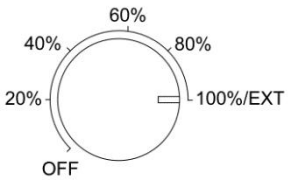

Output Operation Range

Model	Typical Set Output Current (mA)	Max Output Power (W)	Output Voltage Min (V)	Output Voltage Max(V)	Minimum Dimming Current (mA)
-C105	1050	320	183	305	105
	1000	320	192	320	100
	950	320	202	337	95
	900	320	213	356	90
	850	320	226	376	85
	800	320	240	400	80
	760	320	253	421	76
	700	295	253	421	76
	650	274	253	421	76
	600	253	253	421	76
	550	232	253	421	76
	500	211	253	421	76
	…	…	…	…	…
	76	32	253	421	76

Model	Typical Set Output Current (mA)	Max Output Power (W)	Output Voltage Min (V)	Output Voltage Max(V)	Minimum Dimming Current (mA)
-C140	1400	320	137	229	140
	1300	320	148	246	130
	1200	320	160	267	120
	1100	320	175	291	110
	1050	320	183	305	105
	1000	305	183	305	105
	950	290	183	305	105
	900	274	183	305	105
	850	259	183	305	105
	800	244	183	305	105
	750	229	183	305	105
	700	213	183	305	105
	…	…	…	…	…
	105	32	183	305	105

July 25, 2024, all rights reserved.

Model	Typical Set Output Current (mA)	Max Output Power (W)	Output Voltage Min (V)	Output Voltage Max(V)	Minimum Dimming Current (mA)
-C210	2100	320	91	152	210
	2000	320	96	160	200
	1900	320	101	168	190
	1800	320	107	178	180
	1700	320	113	188	170
	1600	320	120	200	160
	1500	320	128	213	150
	1400	320	137	229	140
	1300	297	137	229	140
	1200	274	137	229	140
	1100	251	137	229	140
	1000	229	137	229	140
	…	…	…	…	…
	140	32	137	229	140

Model	Typical Set Output Current (mA)	Max Output Power (W)	Output Voltage Min (V)	Output Voltage Max(V)	Minimum Dimming Current (mA)
-C420	4200	320	46	76	420
	4100	320	47	78	410
	4000	320	48	80	400
	3900	320	49	82	390
	3800	320	51	84	380
	3700	320	52	86	370
	3600	320	53	89	360
	3500	320	55	91	350
	3400	320	56	94	340
	3300	320	58	97	330
	3200	320	60	100	320
	3100	320	62	103	310
	3000	320	64	107	300
	2900	320	66	110	290
	2800	320	69	114	280
	2700	309	69	114	280
	…	…	…	…	…
	280	32	69	114	280

July 25, 2024, all rights reserved.

Model	Typical Set Output Current (mA)	Max Output Power (W)	Output Voltage Min (V)	Output Voltage Max(V)	Minimum Dimming Current (mA)
-C700	7000	320	27	46	700
	6800	320	28	47	680
	6600	320	29	48	660
	6400	320	30	50	640
	6200	320	31	52	620
	6000	320	32	53	600
	5800	320	33	55	580
	5600	320	34	57	560
	5400	320	36	59	540
	5200	320	37	62	520
	5000	320	38	64	500
	4800	307	38	64	500
	4600	294	38	64	500
	4400	282	38	64	500
	4200	269	38	64	500
	4000	256	38	64	500
	…	…	…	…	…
	500	32	38	64	500

Revision History

Revision	Date	Contents
D	2022-03-22	1. Index page added 2. Reduced dimming interface sourcing current 3. DALI 2.0 compatibility added 4. Programming instruction added 5. Inrush current data added 6. Tc point position indication added 7. Dielectric strength level added 8. Packaging information added 9. Mechanical design change with dimming cable color 10. Revision history added
E	2023-07-14	1. Update cable selection table in Model List Section
F	2023-09-15	1. Update model selection table with -DN,-EN,DR models
G	2024-07-25	1. Fast dimming description added 2. Power factor, THD, efficiency curves updated by 10-100% load range 3. MCB usage and driver quantity section added 4. Inrush current data updated