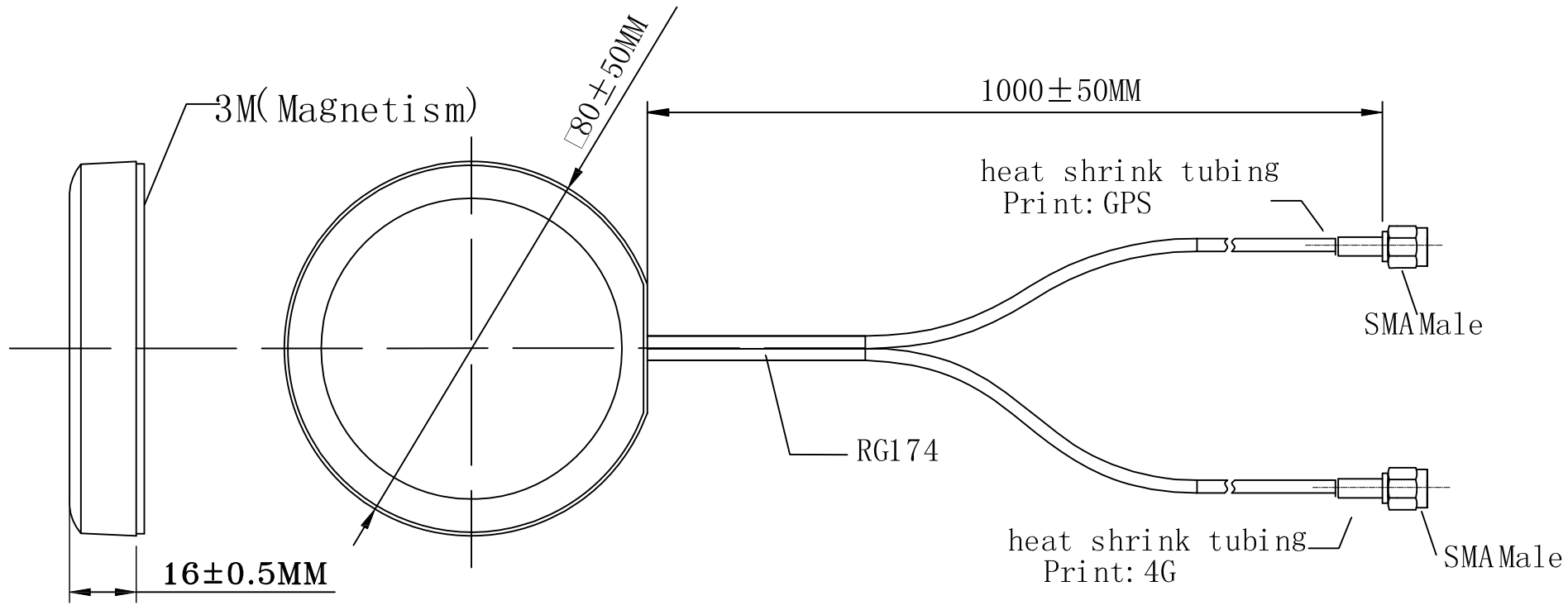

Item		Specifications	
GPS/GLONASS Antenna	Dielectric Antenna	Frequency Range	1560-1602MHz
		Polarization	RHCP
		Gain	2dBi (Zenith)
		V.S.W.R	<1.5
		Impendance	50ohm
	LNA	Gain	28±2dB
		Noise Figure	<2dB
		V.S.W.R	<2.0
		Supply Voltage	3~5V DC
		Current Consumption	<20mA
cellular Antenna		Frequency Range	700-960/ 1710-2700MHz
		V.S.W.R	<3.0
		Polarization	Linear
		Gain	2.0dBi(Zenith)
		Impendance	50ohm
Mechanical		Cable	RG174
		Connector	SMA MALE
		Material	ABS
		Mounting Method	Screw
Environmental		Operating Temperature	-40℃~+85℃
		Relative Humidity	Up to 95%
		Ingress Protection	IP65 (exclude cableoutlet)
		Vibration	10to 55Hz with 1.5mm amplitude 2hours
		Environmentally Friendly	ROHS Compliant

ALL DIMENSIONS ARE IN MILLIMETERS AND [INCHES] Unit:mm

THIRD ANGLE PROJECTION		PART NAME	ROHO COMMUNICATION TECHNOLOGY CO.,LTD
		4G+GLONASS SMA Antenna	
TOLERANCE UNLESS OTHERWISE SPECIFIED .x ±0.25 .xx ±0.20		DRAWN BY R.YU	PART NO. 4G-GPS-GLONASS-SMAJ
		CHECKED BY JOSON	
UNIT mm	SCALE free	APPROVED BY	CUSTOMER P/N
REV.	A	DATE 2023-4-5	