| FOR 客户名称 | APPROVED 客户确认签字 | ATTN 销售负责人 |
|---|---|---|
| | | |

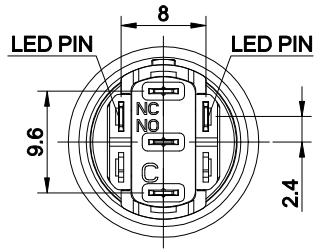


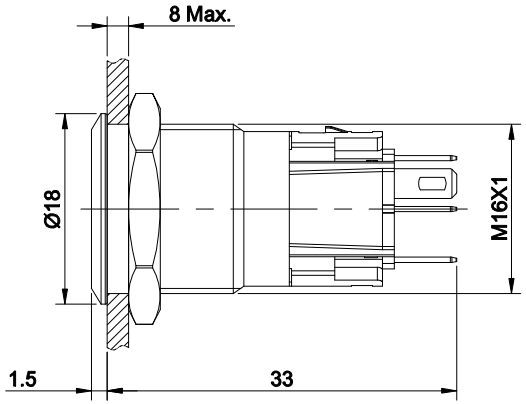


THE SHADED PART IS ILLUMINATED

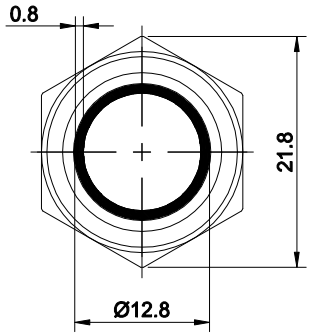


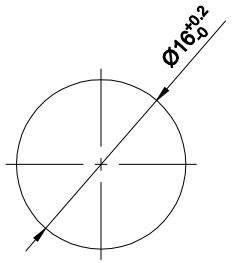


PANEL CUTOUT

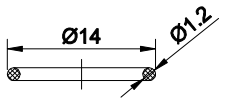


SEAL RING

## PART NUMBER:ONPOW6116F-11■E/△/▲/◎/※

| "■" | OPERATION MODE |
|---|---|
| NO LETTER | MOMENTARY |
| Z | LATCHING |

| "△" | LAMP COLOR |
|---|---|
| R | RED |
| G | GREEN |
| Y | YELLOW |
| B | BLUE |
| W | WHITE |

| "▲" | LAMP VOLTAGE |
|---|---|
| 6V | AC/DC 6V |
| 12V | AC/DC 12V |
| 24V | AC/DC 24V |
| 110V | AC/DC 110V |
| 220V | AC/DC 220V |
| OTHER VOLTAGE CAN BE MADE TO ORDER | |

| "◎" | CRUST MATERIAL |
|---|---|
| S | STAINLESS STEEL |
| A | AL ALLOY(BLACK) |

| "※" | PROTECTION DEGREE |
|---|---|
| NO LETTER | IP65 |
| FP | IP67 |
| IP68 | IP68(CUSTOMIZED) |

**SCHEMATIC**

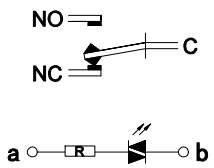


SINGLE-BREAKPOINT QUICK-ACTING CONTACT SWITCHES WITH THREE TERMINALS

SPECIFICATIONS:
1.SWITCH RATING: Ui:250V, Ith:5A.
2.MECHANICAL LIFE: ≥1,000,000 cycles(MOMENTARY),
≥500,000 cycles(LATCHING).
3.ELECTRICAL LIFE: ≥50,000 cycles.
4.INITIAL CONTACT RESISTANCE: ≤50mΩ.
5.INSULATION RESISTANCE: ≥1000MΩ(500VDC).
6.POWER-FREQUENCY WITHSTAND VOLTAGE: 1,500V, RMS 50Hz, 1min.
7.OPERATING TEMPERATURE: -25˚C～ +55˚C(NO FREEZING, KEEP THE AIR FLOWING AROUND PUSHBUTTON).
8.TORQUE: ABOUT 0.6N·m APPLIED TO NUT.
9.OPERATING FORCE: ABOUT 3N.
10.OPERATING TRAVEL: ABOUT 3mm.
11.FRONT PANEL PROTECTION DEGREE: IP65/IP67(IP68 CAN BE CUSTOMIZED); IK09.
12.TERMINAL TYPE: PIN TERMINAL(2.8X0.5mm).
13.GENERAL TOLERANCE:0-18mm=±0.25, 18-80mm=±0.52.
14.COMPLIANT WITH RoHS.

MATERIALS:
1.CONTACT: SILVER ALLOY.
2.BUTTON: ◎/PC.
3.BODY: ◎.
4.BASE: PA.

| BRAND 品牌 | 红波按钮制造有限公司 ONPOW PUSH BUTTON MANUFACTURE CO.,LTD. | | | | |
|---|---|---|---|---|---|
| ONPOW 欧宝龙® | | | | | |
| TITLE 名称 | ONPOW61 SERIES ANTI-VANDAL PUSH BUTTON | | | UNIT 单位 | mm |
| DWG NO. 图号 | ONPOW6116F-11E | | SCALE 比例 1.4 : 1 | SIZE 图纸 | A4 |
| FILE NAME 档案名称 | ONPOW6116-11E .DWG | DRAWN 制图 LJJ 2025/07/04 | SHEET 张 1/1 | REV. 版本 | V1.0 |