Ver.	Modify No.	Details	Area	P.I.C	Date

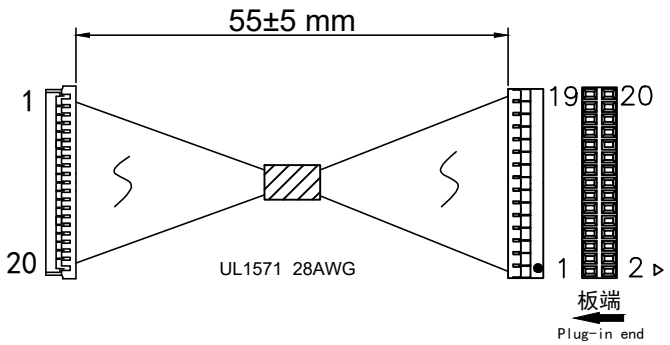

P1:FI-S20S

P2:DP2.0-2x10P

PIN ASSIGNMENT

COLOR	P1	P2
Red	20	1
Red	19	2
	18	NC
Black	17	4
Blue	16	5
White	15	6
Black	14	7
Blue	13	8
White	12	9
Black	11	10
Blue	10	11
White	9	12
Black	8	13
Blue	7	14
White	6	15
Black	5	16
Black	4	20
	3	NC
Blue	2	17
White	1	18

NO.	NAME:	SPEC:	QTY	Remark
1			1	
2			1	
3			2	
4			1	

All material used conform to RoHS standards

Part No.	LVDS-FI-S20S-DP2.0-2x10-55-AL685623.003-sinotectronics		
Product Name: LVDS Cable	Period Mark: A	View Angle	Ratio: 1:1
	Page 1	Total 1 Page	
Business Unit: SNT-BTP	SINOTECTRONICS 思诺泰科创 - 造未来 Interactivity Changes the World		
Product Series: BTP-Cable			

A3