Specification
规格书

Shineon model 易美产品型号:	:	**S50V06-FC02 Series**
Document number 文件编号:	:	**NCYM-DS-476**
Customer 客户名称	:	
Customer P/N 客户产品型号	:	

Customer Approved Production Parameter BIN
客户承认产品BIN表

IV/LM: 亮度/流明:	**WL/XY:** 波长/区块:	**CCT:** 色温:
VF: 电压:	**Ra:** 显指:	**Other:** 其它:
Approved By 审核	**Checked By** 确认	

Shineon Checked
易美审核

Approval 核准	Check 审核	Design 设计
朱磊	朱磊	王磊

Address：ShineOn Science Park, 600 Hongguang 2nd Road, Changdong Town, Nanchang County, Nanchang City, Jiangxi Province
地址：江西省南昌市南昌县昌东镇宏光二路600号易美科技园
Web/网址：www.shineon.cn Shineon (Nanchang) Technology CO.,LTD

Features 特性

- Dimensions:5.0x5.0x0.7mm. 封装尺寸：5.0x5.0x0.7mm
- Wide viewing angle. 广视角
- ROHS Compliant. ROHS认证
- EMC package . EMC封装
- High Reliability of Flip Chip. 倒装芯片高可靠性
- Highly efficient and sulfur-resistant best 高光效且抗硫化



ATTENTION
OBSERVE PRECAUTIONS FOR HANDLING ELECTROSTATIC DISCHARGE SENSITIVE DEVICES
注意：接触静电放电敏感元件时请采取适当的预防措施

Applications 应用

- Outdoor lighting :LED Downlight, Flood Light，Street light Highbay
  户外照明： 筒灯、投光灯、路灯、高棚灯

◆ Package Dimensions 封装尺寸

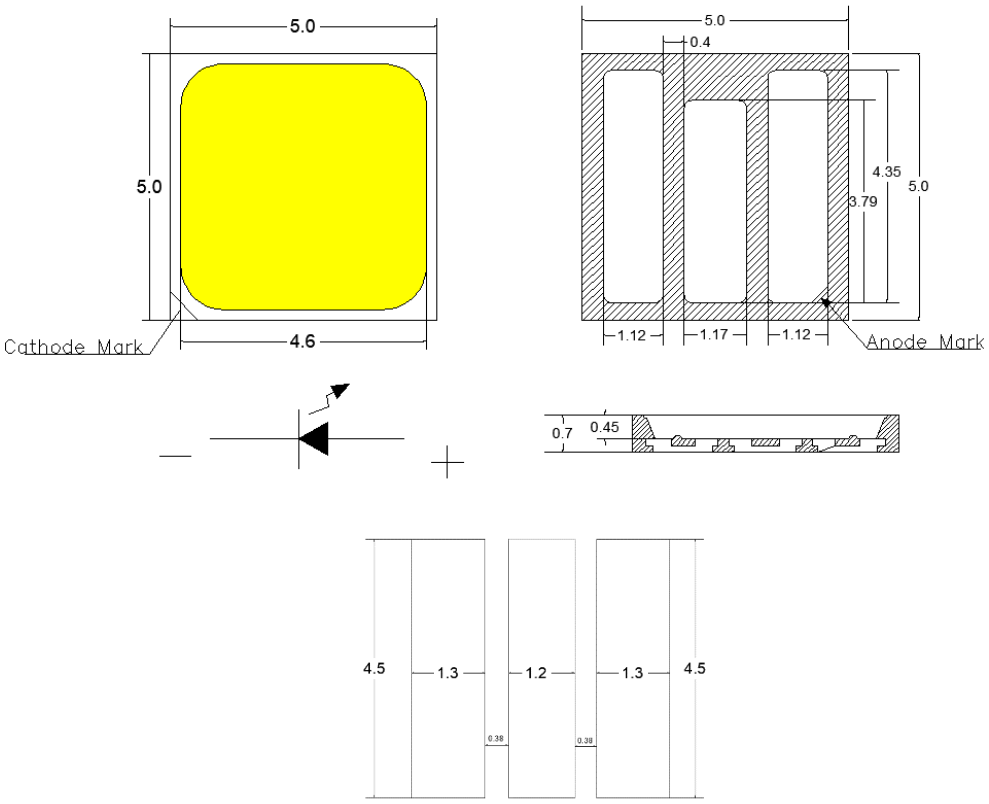

Recommended Solder Pad Design 推荐焊盘设计

Notes:

1. All dimensions in millimeters.所有尺寸单位为mm
2. Thickness tolerance of copper plate is ±0.02mm. 铜材料片厚度公差为±0.02mm
3. Thickness tolerance of product is ±0.05mm. 产品厚度公差为±0.05mm
4. Tolerance is ±0.1mm unless otherwise noted. 如未特别注明，默认公差为±0.1mm
5. Specifications are subject to change without notice.规格如有变更, 恕不另行通知。

Table 1. Absolute Maximum Ratings at Ts=25°C 最大限定参数

Parameter 参数	Symbol 符号	Value 值	Units 单位
Forward Current 正向电流	IF	1000	mA
Peak Forward Current 正向脉冲电流	IFP	1200	mA
Power Dissipation 功耗	PD	6000	mW
Electrostatic Discharge 静电击穿电压	ESD	2000HBM	V
Storage Temperature 储存温度	Tstg	-40~+100	℃
Operating Temperature 操作温度	TOPR	-40 ~ +85	℃
Soldering Temperature 焊接温度	T_{sld}	Reflow Soldering: 260℃ for 10 seconds	
Junction Temperature 结温	TJ	125	℃

Table 2. Electrical/Optical Characteristics at Ts=25°C 电性与光学特性

Item 项目	Symbol 符号	Testcondition 测试条件	Value			Unit 单位
			Min. 最小值	Typ 典型值	Max. 最大值	
Forward Voltage 正向电压	VF	IF=750mA	5.6	5.83	6.0	V
Luminous Flux 光通量	Φ	IF=750mA	---	---	1000	Lm
Color Rendering Index 显色指数	Ra70	IF=750mA	70	---	---	---
	Ra80	IF=750mA	80	---	---	---
	Ra90	IF=750mA	90	---	---	---
Color TempeRature 色温	CCT	IF=750mA	2600	---	7000	K
Viewing Angle 发光角度	2θ1/2	IF=750mA	---	120	---	deg
Thermal Resistance. (热阻)	RTHJ-S	IF=750mA	---	2	---	℃/W

Notes 注:

1. Luminous flux is measured with an accuRacy of± 5%. 光通量的测量精度为± 5%。
2. The above forward voltage measurement allowance toleRance is±0.07V.以上所示电压测量误差±0.07v。
3. RA is measured with an accuRacy of±2.显色指数测量精度为± 2。
4. All measurements were made under the standardized environment of Shineon.所有测试都是基于易美现有的标准测试平台
5. Care is to betaken that power dissipation does not exceed the absolute maximum Rating of the product.使用功率不能超过规定的最大值。
6. When the LEDs are in opeRation the maximum current should be decided after measuring the package tempeRature ，junction tempeRature should not exceed the maximum Rate.LED使用的最大电流需要根据散热条件确定，结温不能超过最大值。
7. ESD yield is over 90% at 2000V ESD (HBM). ESD protection during products handing is needed.
   90%的LED通过人体模式ESD2000V 测试， 在操作时请注意静电防护。

Table 3．Luminous Flux　光通量 (Tj=25℃)

PRODUCT 产品	Condition 条件	Ra 显色指数	TC 色温	Luminous Flux（lm） 亮度范围	Luminous Flux Typ. 亮度典型值	η (lm/W) 光效
5050A06-XXN75-F2S2P-F02-LX	750mA	70	2700K	800-900	850	195
			3000K	850-900	895	205
			3500K	890-990	934	213
			4000K	900-1000	943	216
			5000K	900-1000	943	216
			5700K	900-1000	943	216
			6500K	890-990	934	213
5050A06-XXH75-F2S2P-F02-LX	750mA	80	2700K	750-850	799	183
			3000K	800-900	841	193
			3500K	840-940	878	200
			4000K	850-950	886	203
			5000K	850-950	886	203
			5700K	850-950	886	203
			6500K	840-940	878	200
5050A06-XXS75-F2S2P-F02-LX	750mA	90	2700K	650-750	698	159
			3000K	690-790	740	168
			3500K	700-800	764	174
			4000K	720-820	771	177
			5000K	720-820	771	177
			5700K	720-820	771	177
			6500K	700-800	764	174

Table 4．Forward Voltage　正向电压(Tj=25℃)

Part　Number 品名	Condition 条件	Rank 等级代码	Forward Voltage 正向电压	Unit 单位
5050A06-XXX75-F2S2P-F02-LX	750mA	C7	5.6-5.8	V
		C8	5.8-6.0	

Table 5. Part Number Nomenclature

5050 A 06- XX N 75 - F2S2P- F02 -LX

① ② ③ ④ ⑤ ⑥ ⑦ ⑧ ⑨

①	机种型号XXXX Model	2835；3014；3020；4014；5630；3030；2016；3535；5050；6060；7070；1F1F……
②	杯型 shape	A:方杯 square cup C：圆杯 circular cup
③	电压类别XX Forward voltage	03:3V; 06:6V; 09:9V; 12:12V; 18:18V; 36:36V; ……
④	中心色温XX CCT code	27：2700K; 30：3000K ; 35:3500K； 57:5700K……
⑤	显指代码X Ra code	L：60—70； N：70—80； H：80—90； V：85-95； S：90—100； E：95—100； F：96-100
⑥	电流代码XX Forward current	10：100mA； 18：180mA ； 35 ：350mA； 75：750mA……
⑦	芯片数量XX Chip Qty’	2S：双晶串联 Double series connection； 2P：双晶并联 Double paRallel connection； 2S2P:双串双并 Double series and double paRallel……
⑧	方案代码XX Internal code1	……
⑨	工艺流程 Process Flow	……

Table 6. Color Bin Definitions 色坐标

Bin Code 等级代码	Center Point		MAJOR AXIS (a ,b).		Theta。
	x	y	3-Step	5-Step	
2700K	0.4578	0.4101	（0.0081，0.0042）	（0.0135，0.007）	53.7
3000K	0.4339	0.4033	（0.00834，0.00408）	（0.0139，0.0068）	53.22
3500K	0.4078	0.3930	（0.00927，0.00414）	（0.01545，0.0069）	54.00
4000K	0.3818	0.3797	（0.00939，0.00402）	（0.01565，0.0067）	53.72
4500K	0.3613	0.3670	（0.00881，0.00378）	（0.01468，0.0063）	54.35
5000K	0.3446	0.3551	（0.00822，0.00354）	（0.0137，0.0059）	59.62
5700K	0.3287	0.3425	（0.00746，0.0032）	（0.01243，0.00533）	59.09
6500K	0.3123	0.3285	（0.00669，0.00285）	（0.01115，0.00475）	58.57

Fig 1. The reference map color area 色区参考图

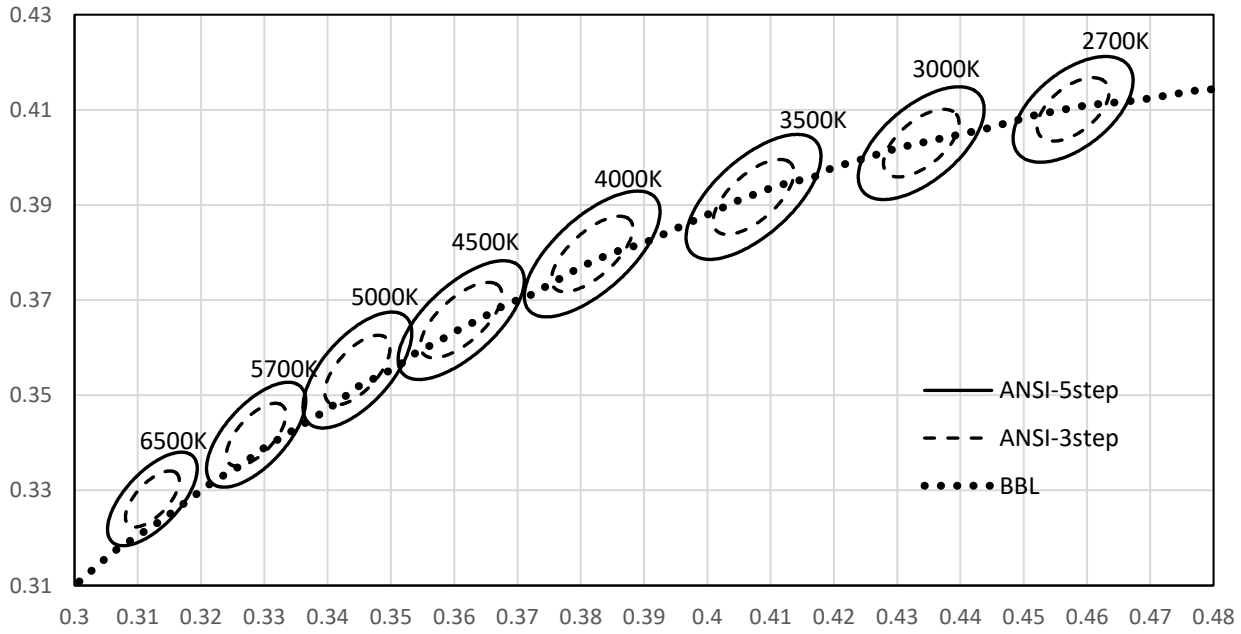

Notes 注：

1.The above color coordinates measurement allowance toleRance is 0.005.以上所示坐标测量误差 0.005。

2.Some color and RA bins may have limited availability, please contact us before ordering.部分颜色和显指可能有限制，请在订购前与我们联系。

Fig 2.Typical optical chaRacteristics curves 典型光学特性曲线

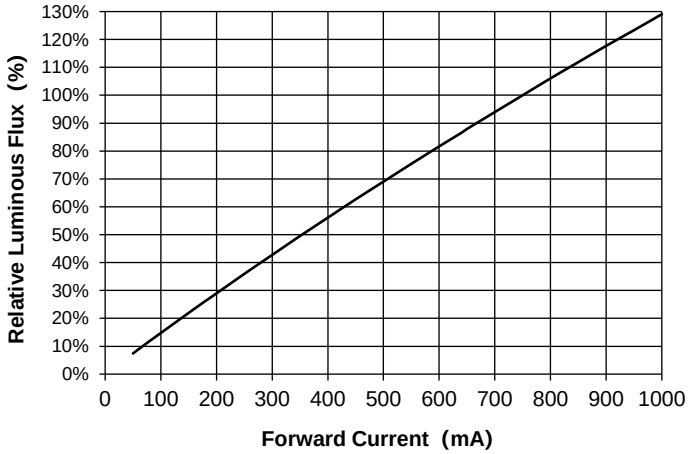

Forward Current Vs. Relative Intensity

正向电流与相对光强特性曲线

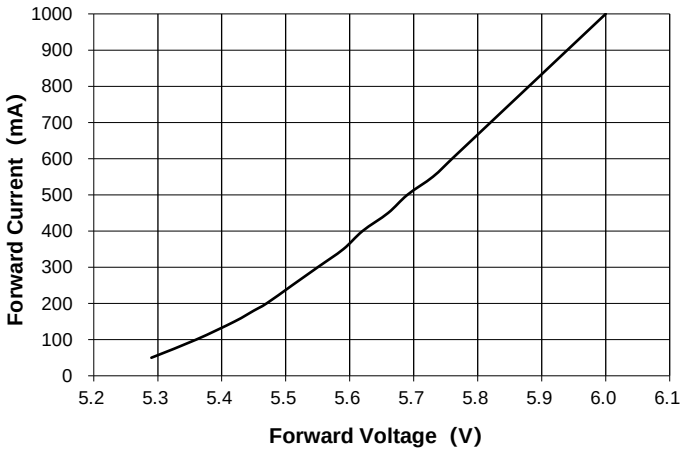

Forward Voltage Vs. Forward Current

伏安特性曲线

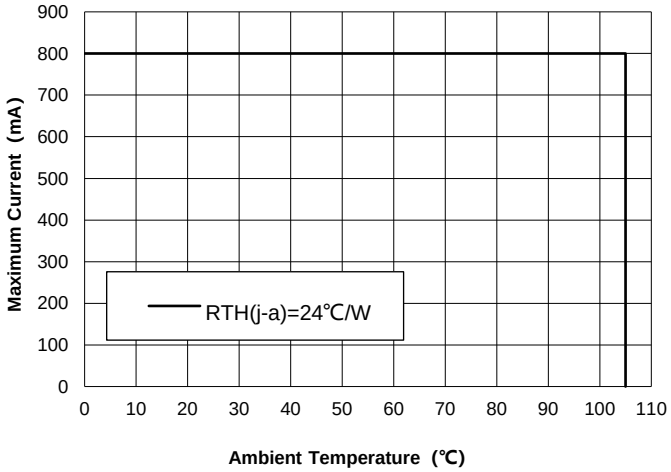

Forward Current VS Soldering Temperature

电流VS温度特性曲线

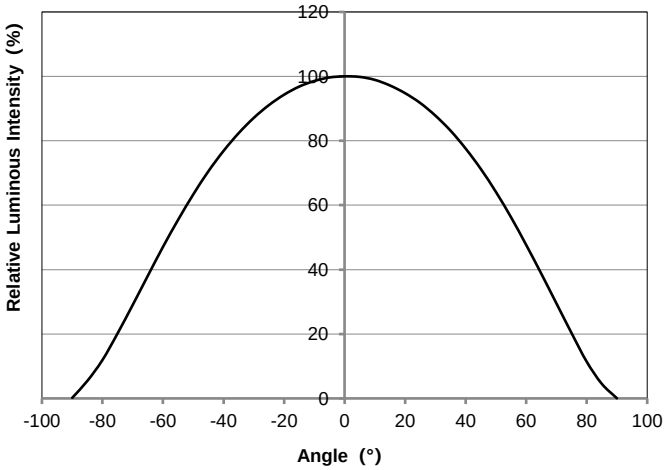

Typical Light-Emitting Angle Radiation Pattern

典型发光角度辐射图

Table 7. Performance at Commonly Used Drive Currents at Tj=25℃ 4000K Ra70

Forward Current	Forward Voltage	Power	Luminous Flux	Luminous efficacy
Typ	Typ	Typ	Typ	Typ
IF (mA)	VF （V）	P（W）	ΦV （lm）	η（lm/W）
50	5.23	0.26	70	267
80	5.28	0.42	112	264
100	5.31	0.53	139	262
150	5.37	0.81	207	256
180	5.40	0.97	247	255
200	5.42	1.08	273	252
250	5.47	1.37	339	248
300	5.51	1.65	403	244
350	5.54	1.94	467	241
400	5.58	2.23	529	237
450	5.62	2.53	591	234
500	5.65	2.83	651	230
550	5.69	3.13	711	227
600	5.73	3.44	770	224
640	5.75	3.68	816	222
650	5.76	3.74	829	221
700	5.79	4.05	886	218
750	5.83	4.37	943	216
800	5.87	4.69	1000	213
850	5.90	5.01	1055	211
900	5.93	5.34	1110	208
950	5.96	5.66	1163	205
1000	5.99	5.99	1217	203

Fig 3.ChaRacteristics GRaph

3.1 Forward Current vs. CIE x, y Shift, Tj = 25ºC

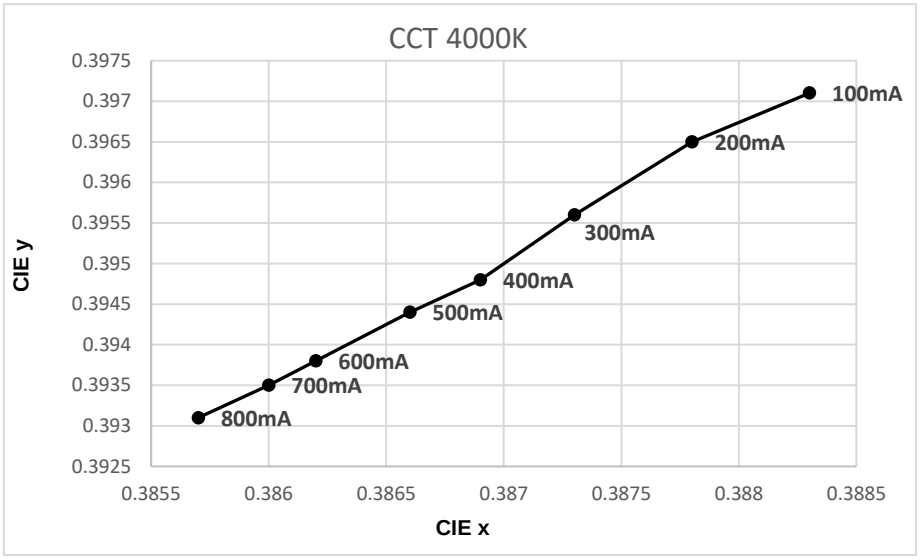

3.2 Junction TempeRature vs. Relative Luminous Flux, IF=750mA

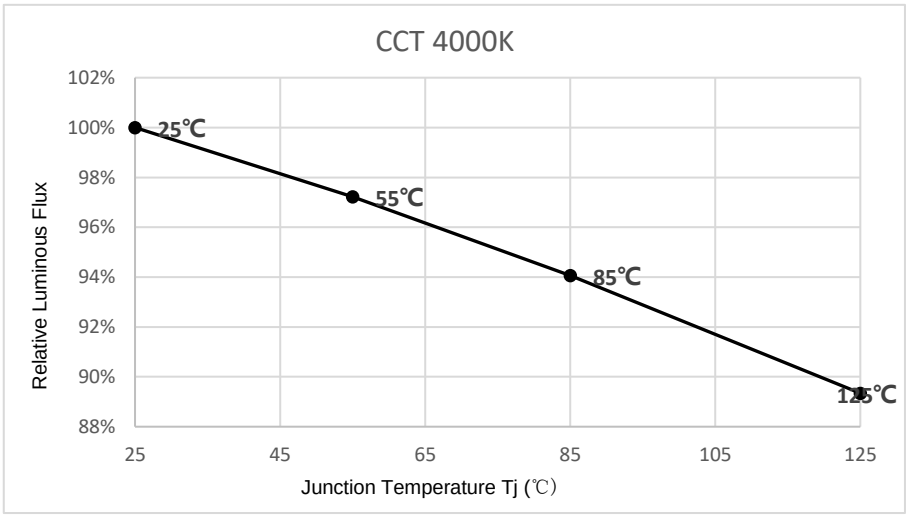

3.3 Junction TempeRature vs. Relative Forward Voltage, IF=750mA

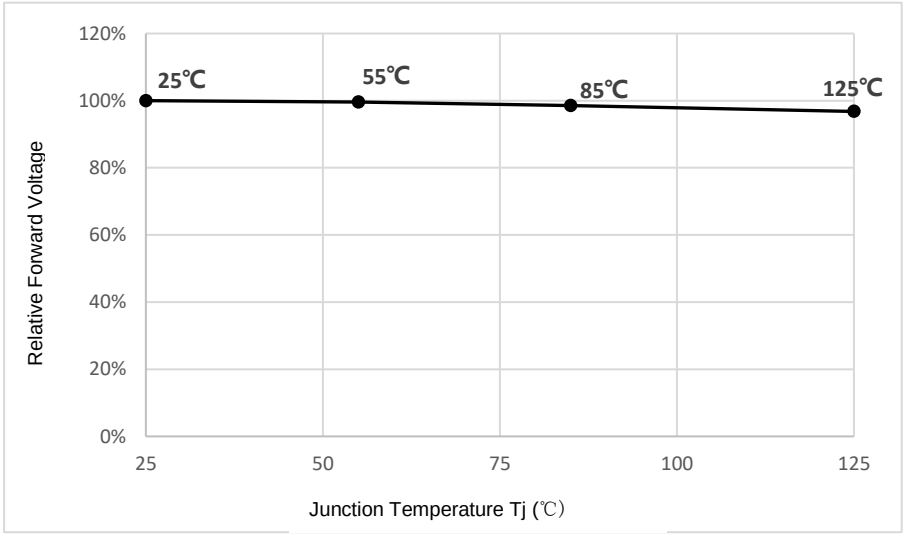

Packaging Specifications 包装规格

Carrier Tape Dimensions 载带尺寸

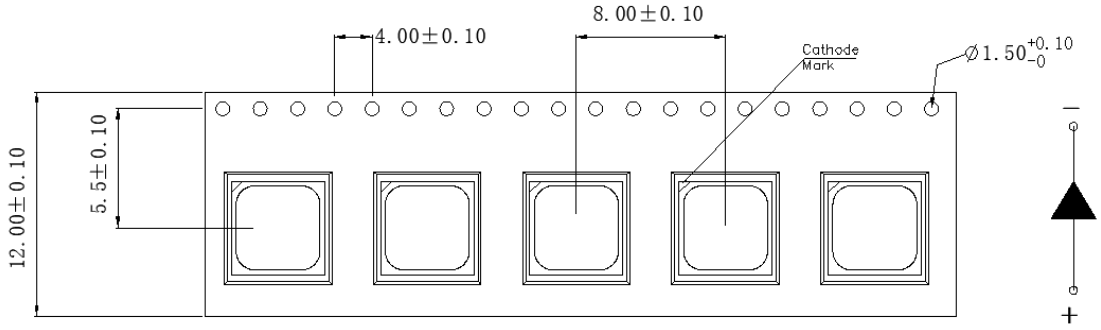

Reel Dimension 卷盘尺寸

Small reel 小卷

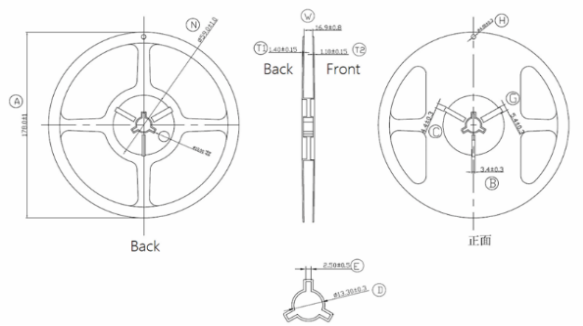

Big reel 大卷

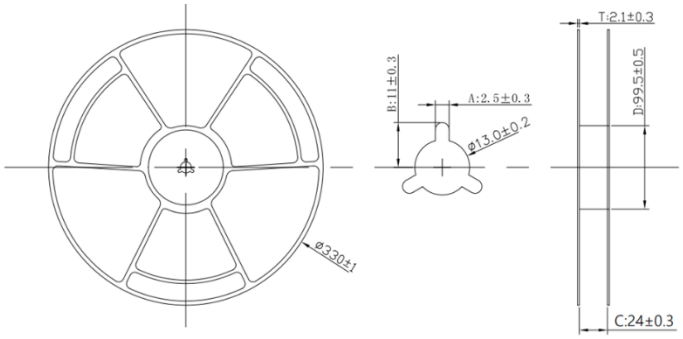

Notes注:

The toleRances unless mentioned ±0.2mm. Unit：mm

未注公差为±0.2毫米，尺寸单位：毫米

包装数量：1500pcs/卷 or 5000pcs/卷

Label Form Specification 标签规格

示例

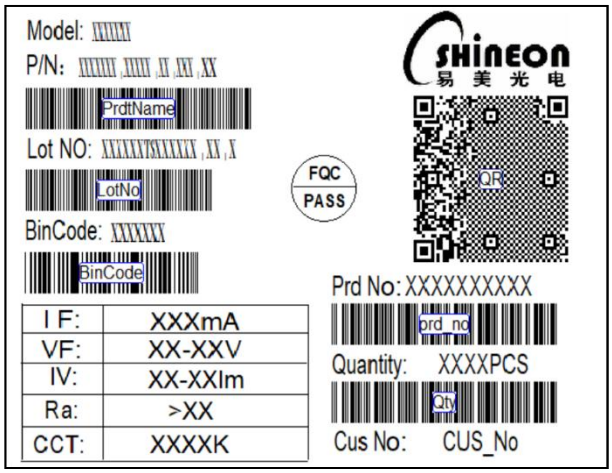

Model：S50V06-FC02 Series	
P/N：5050A06-XXN75-F2S2P-F02-LX (XX 代表色温）	
Bin Code：亮度等级+色温代码+电压等级+显指 （例：L2/A50-3/C9/N）	
IF：XXX mA 测试电流	
VF：X.X-X.X V 电压范围	Prd No：产品料号
IV:XX-XX lm 亮度范围	
Ra：>XX 显色指数	Quantity: 数量PCS
CCT: XXXXK 色温	Cus No: 客户料号

Moisture Resistant Packing Process 防潮包装过程

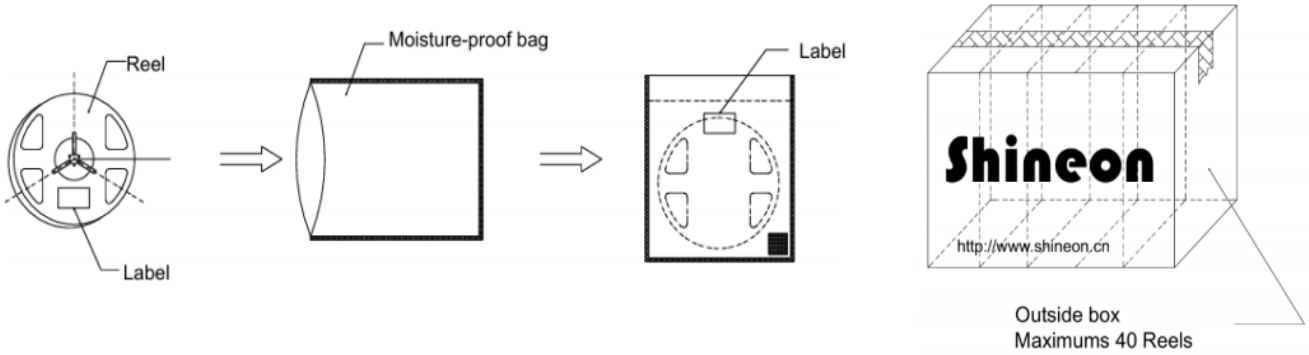

Notes注:

Package : P/N、 Manufacturing data Code No. and quantity to be indicated on a damp proof Package. 包装 :品名、生产数据代码和数量须在防潮包装上注明

Reliability Test Items And Conditions 信赖性测试项目及条件

Test Items 项目	Test Condition 测试条件	Time 时间	Quantity 数量	Ac/Re 接收/拒收
Reflow 回流焊	Temp:200℃max T=10 sec	2times.	20Pcs	0/1
Thermal Shock 冷热冲击	-40℃ 15min ↑↓15s 125℃ 15min	200 cycle	20Pcs	0/1
Temperature cycling 温度循环	-40℃（30min）~ 25℃（5min）~ 100℃（30min）~25℃（5min）≥ 60%RH	200 cycle	20Pcs	0/1
High TempeRature High Humidity Life Test 高温高湿通电	Ta=85℃/ 85%RH IF=Max	1000Hrs.	20Pcs	0/1
Steady State OpeRating Life of High TempeRature 高温点亮稳态老化	Ts=105℃, IF=Max	1000Hrs.	20Pcs	0/1
SP 硫化	光源放入盛有0.05g硫磺粉末的250ml广口瓶内，灯珠正面朝上且排布均匀密封于70℃恒温箱内	24Hrs.	10Pcs	0/1
Red ink penetration test 红墨水	光源放入30g红墨水+3g酒精的混合也体内，Ta=100℃	2Hrs.	20Pcs	0/1

Test Items 项目	Symbol 符号	Test Condition 测试条件	Rateria For Judgement 判定标准	
			Min. 最小	Max. 最大
Forward Voltage 正向电压	VF	IF=750mA	-	U.S.L*)x1.1
Reverse Current 反向电流	IR	VR =7V	-	U.S.L*)x2.0
Luminous Flux 光通量	LM	IF=750mA	L.S.L*)x0.7	-
CCX&CCY X坐标&Y坐标	x,y	IF=Typical Current 典型电流		Shift<0.02 漂移<0.02

Rateria For Judging Damage 失效判定标准

Notes注:

1.U.S.L: Upper standard level规格上限， L.S.L: Lower standard level 规格下限

2.The Reliability tests are based on Shineon existing test platform. 信赖性测试基于易美现有的测试平台。

3.The technical information shown in the data sheets are limited to the typical chaRacteristics and circuit examples of the referenced products. It does not constitute the warRanting of industrial property nor the gRanting of any license.
以上技术数据仅为产品的典型值，只作为参考，不作为任何应用条件及应用方式的保证。

SMT Reflow Soldering Instructions SMT回流焊说明

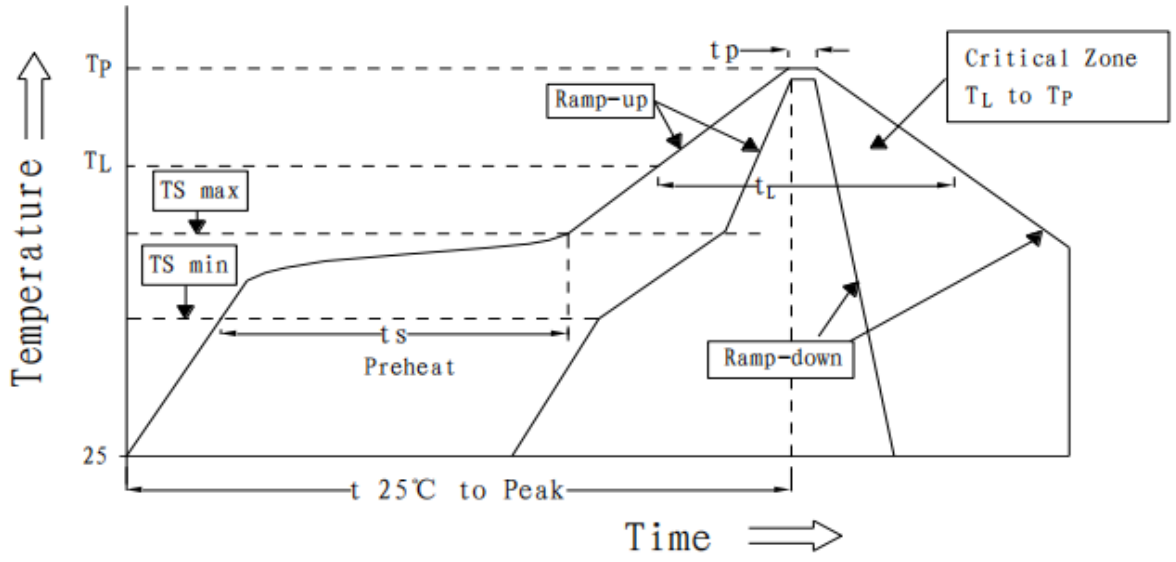

平均升温速度 (Tsmax 至 Tp)	1-3℃/ 秒（峰值段≤3℃/s）
预热：最低温度 (Tsmin)	40℃
预热：最高温度 (Tsmax)	100℃
预热：时间 (Tsmin 至 Tsmax)	50 - 100 秒
限时维持高温：温度 (TL)	151℃
限时维持高温：时间 (tL)	80-120 秒
峰值 / 分类温度 (Tp)	190℃~200℃
限时峰值分类温度：时间 (tp)	10-20 秒
与实际峰值温度 (Tp) 相差 5 °C 以内的保持时间	20-40 秒
降温速度	2-4 °C/ 秒
25 °C 升至峰值温度所需时间	4-7 分钟

Notes 注：

1.Reflow soldering should not be done more than two times. In the case of more than 24 hours passed soldering after first, LEDs will be damaged. 回流焊次数不可以超过两次，两次回流焊的时间间隔如果超过24小时，LED可能由于吸湿而损坏。

2.When soldering,do not put stress on the LEDs during heating.当焊接时，不要在材料受热时用力压胶体表面。

Soldering Iron 烙铁焊接

(1) When hand soldering, keep the tempeRature of iron below less 300℃ less than 3 seconds
当手工焊接时，烙铁的温度必须小于 300℃，时间不可超过 3 秒。

(2) The handsolder should be done only one time.手工焊接只可焊接一次。

Repairing 修补

Repair should not be done after the LEDs have been soldered. When repairing is unavoidable,a double-head soldering iron should be used (as below figure). It should be confirmed in advance whether the chaRacteristics of LEDs will or will not be damaged by repairing. LED 回流焊后不应该修复，当必须修复时，必须使用双头烙铁，而且事先应确认此种方式会不会损坏 LED 本身的特性。

Handling Precautions 使用注意事项

(1) The encapsulated material of the LEDs is silicone. Therefore the LEDs have a soft surface on the top of package. The pressure to the top surface will be influence to the reliability of the LEDs. Precautions should be taken to avoid the strong pressure on the encapsulated part. So when use the picking up nozzle, the pressure on the silicone resin should be proper. LED 封装胶为硅胶，表面较软，用力按压胶体表面会影响 LED 可靠性，因此应有预防措施避免在按压器件，当使用吸嘴时，胶体表面的压力应是恰当的。

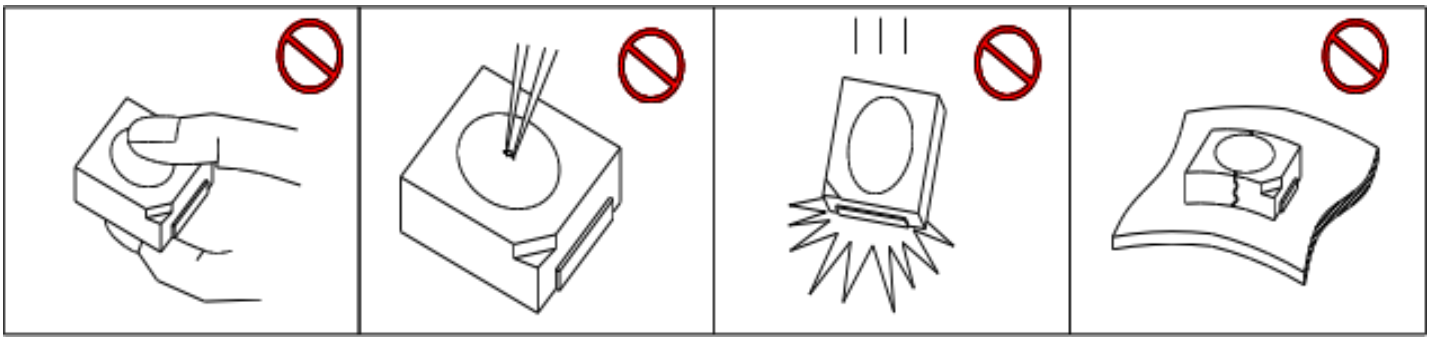

(2) Components should not be mounted on warped (non coplanar) portion of PCB. After soldering, do not warpthe circuit board.LED 灯珠不要焊接在弯曲的 PCB 板上，焊接之后，也不要弯折线路板。

(3) Do not apply mechanical force or excess vibRation during the cooling process to normal tempeRature aftersoldering. Do not Rapidly cool device after soldering. 回流焊之后冷却过程中，不要对材料实加外力，也不要有震动，回流焊后，不要采用激剧冷却的方式。

(4) LED opeRating environment and sulfur element composition cannot be over 100PPM in the LED mating usage material. This is provided for informational purposes only and is not a warRanty or endorsement.LED 工作环境及与 LED 适配的材料中硫元素及化合物成份不可超过 100PPM .这只是一个建议，不作任何品质担保。

(5) In order to prevent ex- ternal material from getting into the inside of LED, which may cause the malfunction of LED, the single content of Bromine element is required to be less than 900PPM, the single content of Chlorine element is required to be less than 900PPM,the total content of Bromine element and Chlorine element in the external materials of the application products is required to be less than 1500PPM. This is provided for informational purposes only and is not a warRanty or endorsement. 为了防止外界物质进入 LED 内部以造成 LED 的损伤，所处环境及所用套件等等，单一的溴元素含量要求小于 900PPM，单一氯元素含量要求小于 900PPM，溴元素与氯元素总含量必须小于 1500PPM ，这只是一个建议，不作任何品质担保。

(6) VOCs (Volatile organic compounds) emitted from materials used in the construction of fixtures can penetRate silicone encapsulants of LEDs and discolor when exposed to heat and photonic energy. The result can be a significant loss of light output from the fixture. Knowledge of the properties of the materials selected tobe used in the construction of fixtures can help prevent these issues. Shineon advises against the use of anychemicals or materials that have been found or are suspected to have an adverse affect on device performance or reliability. To verify compatibility, Shineon recommends that all chemicals and materials be tested in the specific application and environment for which they are intended to be used. Attaching LEDs, do not use adhesives that outgas organic vapor. 应用套件中的挥发性物质会渗透到 LED 内部，在通电产生光子及热的条件下，会导致 LED 变色，进而造成严重光衰，提前了解套件材料能够避免产生这些问题。易美反对使用任何对 LED 器件的性能或者可靠性有害的物质或材料，不管这些材料是已经证实了的还是仅仅怀疑有害。针对特定的用途和使用环境，易美建议对所有的物质和材料进行相容性的测试。在贴装 LED 时候，不要使用能产生有机挥发性气体的粘结剂。

(7) In designing a circuit,the current through each LED must be exceed the absolute maximum Rating specified for each LED.In the meanwhile,resistors for protection should be applied,otherwise slight voltage shift will cause big current change,burn out may happen. The driving circuit must be designed to allow forward voltage only when it is ON or OFF.If the reverse voltage is applied to LED, migRation can be geneRated resulting in LED damage. 设计电路时，通过 LED 的电流不能超过规定的最大值，同时，还需使用保护电阻，否则，微小的电压变化将会引起较大电流变化，可能导致产品损毁。 电路设计必须保证只有在开启或者关闭的时候出现正向电压的变化，不要施加反压，否则会损坏 LED。

(8) Thermal Design is paRamount importance because heat geneRation may result in the ChaRacteristicsdecline,such as brightness decreased,Color change and so on.Please consider the heat geneRation of theLEDs when making the system design.LED 容易因为自身的发热和环境的温度改变而改变，温度升高会降低 LED 发光效率，影响发光颜色，所以在设计时应充分考虑散热问题。

(9) Compared to standard encapsulants, silicone is geneRally softer, and the surface is more likely to attRactdust ， requiring special care during processing. In cases where a minimal level of dirt and dust particles cannot be guaRanteed, a suitable cleaning solution must be applied to the surface after the soldering of components. Refond suggests using isopropyl alcohol for cleaning. In case other solvents are used, it must be assured thatthese solvents do not dissolve the package or resin. UltRasonic cleaning is not recommended. UltRasoniccleaning may cause damage to the LED. 与其他封装胶相比，硅胶通常较软，表面易吸附脏物，应用时应特别注意，当对产品洁净度要求较高时，回流焊以后需要采用恰当的清洗方式，我们推荐用异丙醇作清洗剂，如需要用到其他清洗剂，必须保证不会破坏封装体，超声清洗可能会对 LED 带来损害，不推荐这种清洗方式。

StoRage 储存

Conditions 种类		TempeRature 温度	Humidity 湿度	Time 时间
StoRage 储存	Before Opening Aluminum Bag 拆包前	≤30℃	≤75%	Within 1 Year From Date 一年内
	After Opening Aluminum Bag 拆包后	≤30℃	≤60%	24hours 24小时
Baking 烘烤		60 ±5℃	-	≥24hours 大于24小时

(10) If the moisture absorbent material（silica gel）has faded away or the LEDs have exceeded the stoRage time baking treatment should be performed after unpacking and based on the following condition（65±5）℃ for above 24 hours.如果干燥剂或包装失效，或者产品不符合以上有效储存条件，需拆包后进行烘烤，烘烤条件：60±5℃，大于 24 小时。

(11)If the package is flatulence or damaged,please notify the sales staff to assist.如果包装胀气或者破损，请通知销售人员协助处理。

(12) Similar to most Solid state devices; LEDs are sensitive to Electro-Static Discharge (ESD) and Electrical Over Stress (EOS). 像其他的半导体电子器件一样， LED 对静电过流击穿非常敏感，需要做好防护。

(13) Other points for attention, please refer to our relevant information.其它注意事项请参照易美相关资料。

Declare 申明

This specification is written both in English and in Chinese and the latter is formal.

产品规格书以中英文方式书写 ， 若有冲突以中文版本为准。