Products Description

- This emergency lighting conversion kit enables Suitable for high-wattage LED luminaires such as high bay lights, LED linear fixtures, and UFO lamps rated between 60 W ~180W. Upon main power failure, the unit automatically switches to emergency mode and drives the connected LED luminaire at 100% output, maintaining illumination for 60~300 minutes depending on load and battery Capacity.

While AC mains is present, the emergency driver charges its built-in battery. Once the battery is fully charged, the charging circuit automatically cuts off to prevent overcharge and the unit enters standby mode. When a power outage occurs, it instantaneously transfers to battery power, keeping the LED fixture lit to provide safe egress lighting and guide occupants to the nearest exit

Instruction

It is recommended that all installation and wiring be carried out by a qualified electrician in strict compliance with applicable local and national electrical wiring regulations. Before commencing installation, these instructions must be read thoroughly and fully understood. This document should be retained by the end user for future reference, routine maintenance, and troubleshooting purposes.

Typical Applications

- LED High Bay/Low bay
- Linear light
- Panel light
- etc

❖ Model List

Model Number	Article No	Input Voltage	Emergency Output Power	Output Voltage	Emergency Time	Warranty
EUB-180N220M301	204021401	100~240Vac	60~180W	220Vdc	1~3hrs	3 years

❖ Electrical Characteristics

Item	Testing Condition	Min	Typical	Max	Unit
Normal AC Input Voltage		100	220	240	V
Input wattage	@Rated Input Voltage & Battery full discharge		<5		W
Input Current	@Rated Input Voltage & Battery full discharge			75	mA
AC Input Frequency		47	50	63	Hz
Emergency Output Voltage		180	220	240	DC
Emergency Power		40	180	240	W
Power Factor	@Rated Input Voltage & Battery full discharge		0.8		
Emergency Conversion Time	@230Vac		2		S
Emergency time		1		3	Hour
Electric Strength	2750Vac 5mA(Input to Output)		2750		Vac
IP Rating			IP65		
Maximum shell Temperature				65	℃
Relevant Standard	IEC 621347-2-7 / IEC 61347-1 / EN55015				

❖ Battery information

Battery type	LiFePO4	Battery type	32700
Battery Capacity	12000mA	Battery pack Voltage	19.2V
Battery charge Voltage	21.9V	Battery discharge Voltage	15.0-21.9V
Battery Charging current	600mA	Battery Charging time	24hrs

❖ Conditions Of Operating & Storage

Item	Min	Max	Remark
Operating Temperature	0℃	50℃	Cold start @ 230V/50Hz Input & Max Output Power
Storage Temperature	-10℃	65℃	This is the ambient temperature
Operating Humidity	10%RH	75% RH	Not Condensing
Storage Humidity	10%RH	90% RH	Not Condensing

❖ Packaging Information

Items	Parameter	Items	Parameter	Unit
Inner Box size	409x123x75	Carton size	510x385x165	mm
Quantity/CTN	6pcs	Net weight/Piece	3.4	kg
N.W / CTN	20.5	G.W / CTN	21	kg
Packaging include	1piece led emergency led driver			

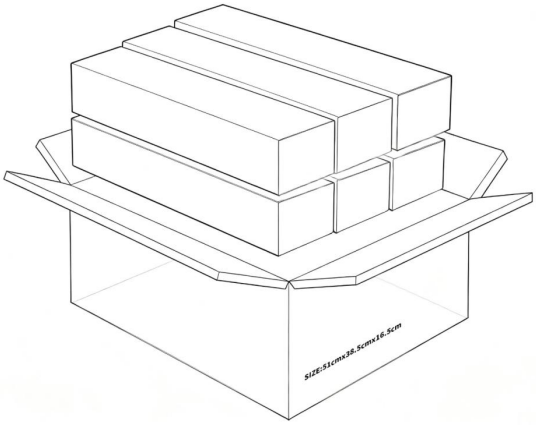

❖ Housing Outlines & Material

Item	Parameter	Item	Parameter
Outlines Driver	368x87x68mm	Housing Material	Al
Fix Hole Size	-	Housing Colour	Silver
IP Scale	IP65	Fix Screw	M4

❖ Mechanical Parameters

L1	368mm
L2	358mm
W1	87mm
W2	77mm
H	68mm
AC Cable Exposed Length	450±10mm
DC Cable Exposed Length	450±10mm

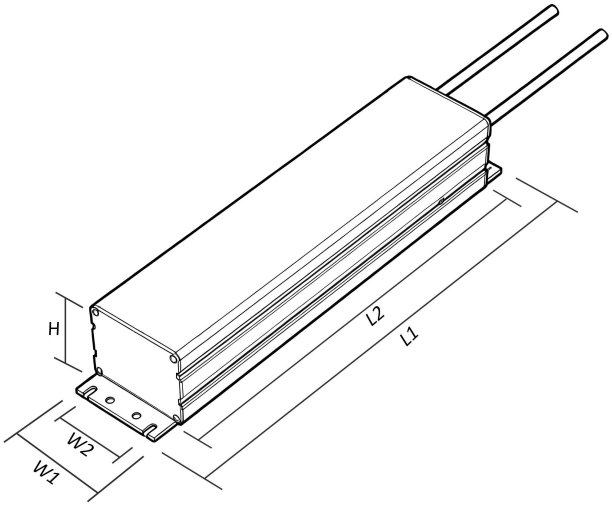

❖ Wiring diagram Wiring : connect LED tube with internal driver

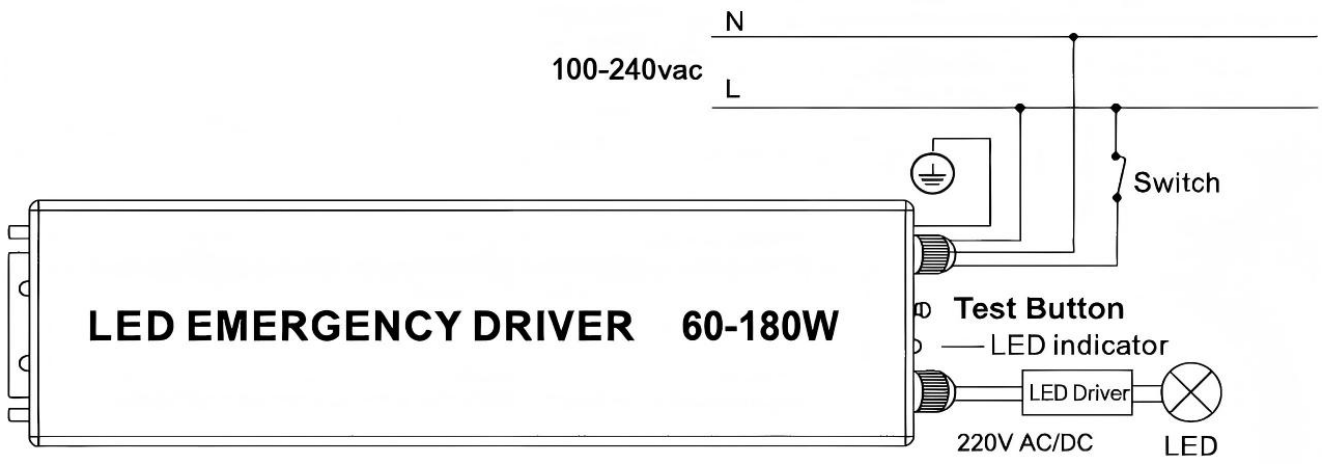

❖ LED indicator status and test button

Green LED: illuminates to indicate main power is on; turns off during emergency mode.

Red LED: illuminates while the battery is charging and turns off when fully charged.

Blue LED: Indicates emergency mode is active.

Test Button: Press and hold for 3 seconds to exit emergency mode

❖ Self test: N/A

❖ Installation

⚠ Safety Note

Installation must be performed by a qualified electrician to ensure compliance with applicable electrical regulations and safety standards.

Installation Steps

1. Isolate Power: Disconnect the mains power supply completely before commencing any wiring work. Verify that the circuit is de-energized using a suitable voltage tester.

2. Connect Wiring: Following the wiring diagrams on both the driver label and the accompanying data sheet, connect the emergency driver to the LED luminaire. Ensure all conductors are terminated correctly and firmly.

3. Verify Connections: Restore mains power briefly to confirm all wiring connections are secure and the LED fixture operates normally under AC power.

4. Test Emergency Function: Switch the LED fixture ON at its normal wall switch. To test the emergency function, disconnect the mains supply (or activate the test button if equipped); the LED should immediately switch to emergency mode at full output. Allow the unit to recharge fully after testing before conducting further tests.

❖ Safety Instructions

When using electrical equipment, basic safety precautions should always be followed, including the following:

Environment: Indoor and outdoor use. Do not install near gas/electric heaters, or in air-handling fixtures/heated air outlets.

Mounting: Install at a height and location inaccessible to unauthorized personnel to prevent tampering.

Electrical & Wiring: All wiring must be performed by a qualified electrician.Wire the emergency driver so the luminaire switch controls main power independently—unaffected by other circuits

Accessories & Usage: Use only manufacturer-recommended accessories and replacement parts. Operate solely for its intended emergency lighting function.

Battery Replace if: runtime falls below 100 min after a full 24H charge, or leakage is visible, please contact us.Do not disassemble or replace any components under any circumstances. Risk of electric shock or fire.

Procedure: Disconnect mains power → remove old battery → install identical-spec replacement, observing correct polarity.

Warning: Do not reverse polarity, short-circuit terminals, or use mismatched batteries—risk of explosion. Dispose of old batteries per local regulations.

Light Source: Supports 30–120W LED Lamp (internal/external driver).

❖ Storage

If unused for over 6 months, perform a full charge–discharge cycle until the LED indicator turns off. Then reconnect to mains power for 24 hours before storing in a dry, well-ventilated location.

Indicator:

	Status ON	Status OFF
Green	Mains powered / normal operation	Emergency mode
Red	Battery charging	Battery fully charged
Blue	Emergency mode active	

❖ Shipment

Items	Details
Humidity Level	Humidity forbid
Swing	Forbid strong swing /Moving softly

❖ Others

1	Unless otherwise specified, all typical technical parameters and curves are tested under the following conditions: AC 230V/50Hz input, full load, and ambient temperature (Ta) of 25°C.
2	The product datasheet is subject to change based on product updates and market requirements. Please consult our sales team to confirm specifications and select the most suitable product for your application.

❖ Revision History

Revision	Date	Subjects (major changes since last revision)
1.0	2025/12/10	Release of final version
2.0		